Foundation Specifications

for 3.7-Meter High Wind Earth Station Antennas

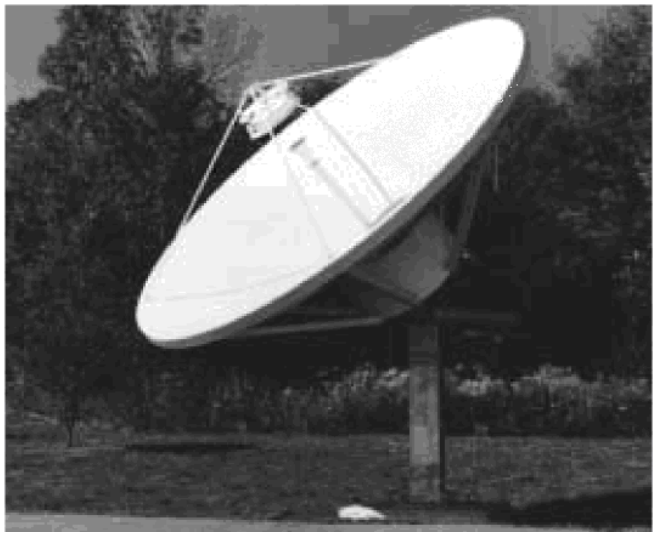

1.0 INTRODUCTION

1.1 This document specifies typical foundation characteristics, designs, requirements and dimensional specifications for the Kratos 3.7-Meter High Wind Earth Station Antennas.

2.0 FOUNDATION LOADING CHARACTERISTICS

2.1 Foundation loads are applied to the foundation pad as shown in Figure 1. Positive applied forces are in the direction of the X, Y, and Z coordinate axes.

2.2 Varying load conditions are dependent upon incident angle of the wind and elevation/azimuth angles of the antenna. Foundation loading for various elevation/azimuth and wind conditions are listed in Table 1.

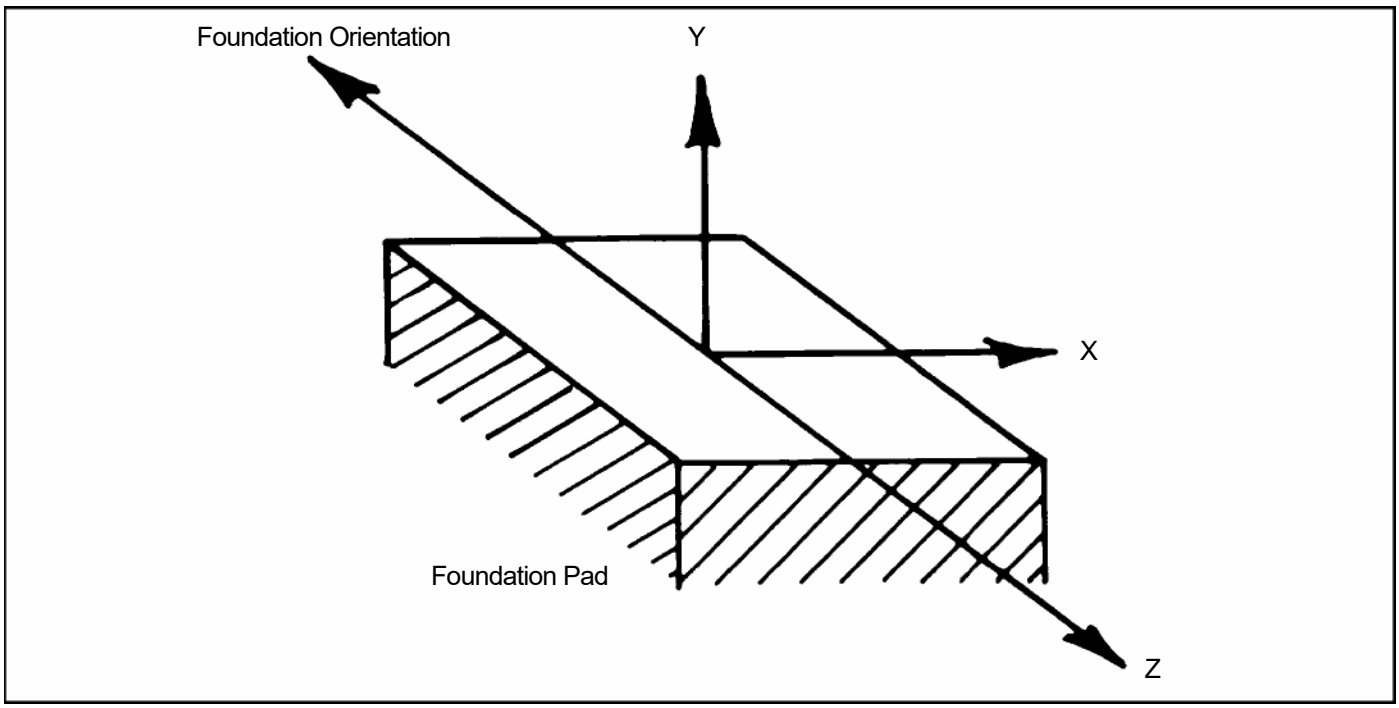

Figure 1

Copyright 2021 Kratos Defense & Security Solutions, Inc.

EL = 0° V = 180 MPH

			FOUNDATION LOADING	FORCE (lbs)	MOMENT (in-lbs)			
Wind Angle	**FDN Pad**	**Load**		**AZ = 0°**			**AZ = 60°**	
			X	Y	Z	X	Y	Z
0°	1	Force	0	-29023	868	-335	-15588	454
	1	Moment	106670	0	0	54430	2598	64071
	2	Force	-6548	13359	6493	-9096	18643	9103
	3	Force	6548	13359	6493	-2568	-5361	-2631
60°	1	Force	-176	-26587	872	-568	-12761	460
	1	Moment	99147	-70752	8467	45729	-68675	66648
	2	Force	-6312	13031	6418	-8004	16551	8168
	3	Force	5594	11250	5391	-2858	-6096	-3061
135°	1	Force	754	10949	936	-264	9587	498
	1	Moment	-16731	220080	-3237	-23264	216910	-12579
	2	Force	1398	-3332	-1796	4631	-10047	-5086
	3	Force	-5036	-9923	-4530	-1142	-1846	-605
180°	1	Force	0	17648	947	-1068	7747	495
	1	Moment	-37409	0	0	-17583	-3624	-14821
	2	Force	4853	-9977	-4781	6701	-13869	-6175
	3	Force	-4853	-9977	-4781	1828	3816	1913
-60°	1	Force	176	-26587	872	-184	-15976	455
	1	Moment	99147	70752	-8467	55655	73127	53339
	2	Force	-5594	11250	5391	-8535	17335	8385
	3	Force	6312	13031	6418	-1818	-3664	-1724
-135°	1	Force	-754	10949	936	-1662	-787	480
	1	Moment	-16731	-220080	3237	8764	-222320	5592
	2	Force	5036	-9923	-4530	4238	-8361	-3805
	3	Force	-1398	-3332	-1796	3534	6843	3127

EL = 30° V = 180 MPH

			FOUNDATION LOADING	FORCE (lbs)	MOMENT (in-lbs)			
Wind Angle	**FDN Pad**	**Load**		**AZ = 0°**			**AZ = 60°**	
			X	Y	Z	X	Y	Z
30°	1	Force	0	-27584	3247	-2429	-18585	1704
	1	Moment	142920	0	0	76757	-1203	97180
	2	Force	-4334	8805	4348	-6085	12337	6074
	3	Force	4334	8805	4348	-1830	-3727	-1807
60°	1	Force	-954	-26015	2466	-2340	-16973	635
	1	Moment	122450	-63106	23388	49065	-62957	94729
	2	Force	-4279	8790	4396	-5977	12270	6082
	3	Force	4390	8837	4271	-1745	-3686	-1881
135°	1	Force	1866	15384	2290	-1058	13916	2293
	1	Moment	5657	146390	-26795	10311	140250	2058
	2	Force	1876	-4096	-2049	5950	-12645	-6212
	3	Force	-6098	-12341	-5742	-1306	-2324	-870
150°	1	Force	0	20896	3022	-2917	10212	1519
	1	Moment	7555	0	0	3952	-6198	27455
	2	Force	5213	-10735	-5092	7170	-14939	-7196
	3	Force	-5213	-10735	-5092	1950	4153	2096
-60°	1	Force	954	-26015	2466	-1203	-17094	1967
	1	Moment	122450	63016	-23388	82255	62248	67114
	2	Force	-4390	8837	4271	-6160	12412	6043
	3	Force	4279	8790	4396	-1856	-3708	-1714
-135°	1	Force	-1866	15384	2290	-3347	530	20
	1	Moment	5657	-146390	26795	-3780	-149650	38636
	2	Force	6098	-12341	-5742	5014	-10210	-4790
	3	Force	-1876	-4096	-2049	4274	8268	4059

Table 1

EL = 60° V = 180 MPH

Wind Angle	FDN Pad	Load	FOUNDATION LOADING FORCE (lbs) MOMENT (in-lbs) AZ = 0° X	Y	Z	AZ = 60° X	Y	Z
60°	1	Force	0	-18125	4324	-3499	-15251	2263
	1	Moment	133190	0	0	73439	-3979	98123
	2	Force	-1328	2642	1396	-1946	3771	1924
	3	Force	1328	2642	1396	-717	-1362	-630
120°	1	Force	0	14401	2914	-2731	6780	1468
	1	Moment	24329	0	0	12547	-5269	35600
	2	Force	3720	-7678	-3618	5102	-10677	-5124
	3	Force	-3720	-7678	-3618	1372	2942	1496

EL = 90° V = 180 MPH

Wind Angle	FDN Pad	Load	FOUNDATION LOADING FORCE (lbs) MOMENT (in-lbs) AZ = 0° X	Y	Z	AZ = 60° X	Y	Z
Front	1	Force	0	-10931	-2192	-131	-10073	-1798
	1	Moment	-22753	0	0	-15726	-34687	2927
	2	Force	-2384	4866	2311	-2110	4373	2121
	3	Force	2284	4866	2311	2241	4501	2106
Side	1	Force	2387	-1077	25	2024	-1043	41
	1	Moment	1031	4399	-35157	1317	23737	-28245
	2	Force	-2396	5023	2456	-2205	4568	2215
	3	Force	-2421	-5145	-2481	-2248	-4725	-2256
Rear	1	Force	0	8777	2242	73	7988	1880
	1	Moment	24815	0	0	18359	34596	-1795
	2	Force	2409	-4988	-2336	2181	-4592	-2192
	3	Force	-2409	-4988	-2336	-2255	-4595	-2117

Notes: Pad 1 represents the base of the mount.

Pad 2 represents the support of the left leg mount (LHS of the pointing direction of the antenna).

Pad 3 represents the support of the right leg mount (RHS of the pointing direction of the antenna).

Table 1 (Con't)

3.0 ANCHOR BOLT REQUIREMENTS

3.1 Typical anchor bolt installation configurations and dimensions are shown in Figure 2.

3.2 Kratos type 203666HW Anchor Bolt Kit includes anchor bolts, alignment plates and required mounting hardware as shown.

4.0 FOUNDATION DESIGNS

4.1 The selected foundation for a particular site is dependent upon local conditions. Soil borings and foundation analysis should be performed by a qualified civil engineer.

4.2 A typical slab type foundation is shown in Figure 2. A copy of this design on a D-size (22" x 34") sheet is available from Kratos on request. Refer to drawing number 240257.

5.0 FOUNDATION ORIENTATION

5.1 Proper foundation orientation is required to obtain the desired orbital arc coverage from a particular site location. The required azimuth and elevation angles of the antenna, relative to the mount must be determined to establish the appropriate foundation orientation. A specific foundation orientation requirement may be requested with the antenna as part of the installation package.

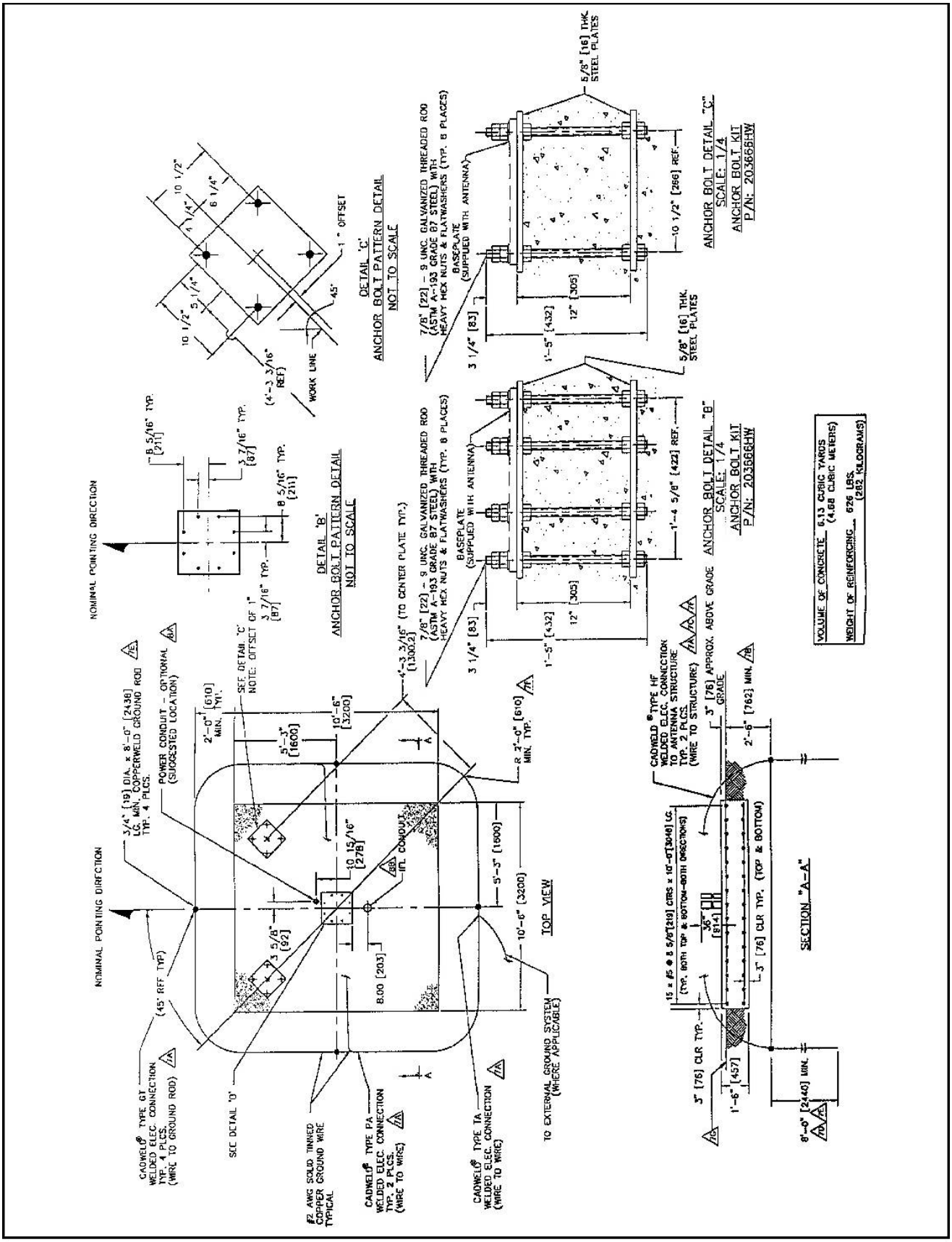
NOMINAL POINTING DIRECTION
TOP VIEW
SECTION "A-A"
DETAIL 'B'
ANCHOR BOLT PATTERN DETAIL
NOT TO SCALE
DETAIL 'C'
ANCHOR BOLT PATTERN DETAIL
NOT TO SCALE
ANCHOR BOLT DETAIL "B"
SCALE: 1/4
ANCHOR BOLT KIT
P/N: 203666HW
ANCHOR BOLT DETAIL "C"
SCALE: 1/4
ANCHOR BOLT KIT
P/N: 203666HW
VOLUME OF CONCRETE 6.13 CUBIC YARDS (4.68 CUBIC METERS)
WEIGHT OF REINFORCING 626 LBS. (282 KILOGRAMS)
BASEPLATE (SUPPLIED WITH ANTENNA)
7/8" [22] - 9 UNC. GALVANIZED THREADED ROD (ASTM A-193 GRADE B7 STEEL) WITH HEAVY HEX NUTS & FLATWASHERS (TYP. 8 PLACES)
5/8" [16] THK. STEEL PLATES
WORK LINE
1" OFFSET
45°
POWER CONDUIT - OPTIONAL (SUGGESTED LOCATION)
3/4" [19] DIA. x 8'-0" [2438] LG. MIN. COPPERWELD GROUND ROD TYP. 4 PLCS.
CADWELD® TYPE GT WELDED ELEC. CONNECTION TYP. 4 PLCS. (WIRE TO GROUND ROD)
SEE DETAIL 'D'
#2 AWG SOLID TINNED COPPER GROUND WIRE TYPICAL
CADWELD® TYPE PA WELDED ELEC. CONNECTION TYP. 2 PLCS. (WIRE TO WIRE)
CADWELD® TYPE TA WELDED ELEC. CONNECTION (WIRE TO WIRE)
TO EXTERNAL GROUND SYSTEM (WHERE APPLICABLE)
CADWELD® TYPE HF WELDED ELEC. CONNECTION TO ANTENNA STRUCTURE TYP. 2 PLCS. (WIRE TO STRUCTURE)
3" [76] APPROX. ABOVE GRADE
3" [76] CLR TYP. (TOP & BOTTOM)
15 x #5 @ 8 5/8" [219] CTRS x 10'-0" [3048] LG. (TYP. BOTH TOP & BOTTOM-BOTH DIRECTIONS)

Figure 2

General Notes

1. Remove all burrs and sharp edges.

2. Dimensions apply before plating.

3. Interpret drawing per ANSI Y14.5M-1982.

4. Dimensions are shown in feet and inches. Dimensions in brackets [ ] are in millimeters.

5. A tolerance of ±1/8" [3] applies to all anchor bolt layout dimensions.

6. Foundation Notes:

A) This foundation is a typical design only. Certification of its suitability for a particular installation by a professional
engineer is required prior to its use for actual fabrication.

B) Contractor shall field verify all dimensions locating existing construction before fabrication of new construction begins.

C) Concrete and related work shall be mixed, placed and cured in accordance with "Building Code Requirements for Reinforced Concrete" ACI 318-89 (Rev. 88) and "Specifications for Structural Concrete" ACI 301-84 (Rev. 88) publication SP-15 (88).

D) Concrete for foundations shall develop a compressive strength of at least 3000 psi [211 kgf/cm^2] in 28 days with a maximum slump of 3" [76] at time of placing.

E) Reinforcing bars shall conform to ASTM A 615 [S1] grade 60 deformed type Fy = 60000 psi [4219 kgf/cm^2].

F) Unless otherwise noted, concrete cover of reinforcing bars shall conform to minimum requirements of ACI 318-89 (Rev. 88).

G) Fabrication of reinforcing steel shall be in accordance with "Manual of Standard Practice for Detailing Reinforcing Concrete Structures" ACI 315-80 (Rev. 86).

H) Provide 3/4" x 45° [19 x 45°] chamfer on all exposed concrete edges.

J) Foundations have been designed to rest on undisturbed soil (per EIA-41 1-A and RS-222-D) with a minimum allowable net vertical bearing capacity of 2000 psf [9770 kgf/m^2]. If undesirable soil conditions are encountered, the engineer shall be notified.

K) Backfills shall be suitable excavated material or other suitable material compacted in 6" lifts to 90% of maximum density as determined by ASTM D1557.

L) If this foundation is to be located in an area where annual frost penetration depth exceeds 15" [381], the local building code specifying a minimum required foundation depth should be consulted.

7. Grounding Electrode System Notes:

The grounding system shown represents the minimum requirements to achieve satisfactory grounding. Actual site conditions and soil resistivity levels will determine final grounding system design to comply with the following:

A) All ground ring, ground rod and antenna structure connections to be EIRCO® products, Inc. Calweld® exothermic type welded electrical connections or equivalent.

B) Ground rods shall be driven to a depth below permanent moisture level (minimum depth shown) as dictated by geographical location.

C) The antenna structure shall be connected to a grounding electrode system consisting of a number of interconnected ground rods. The system shall meet the requirements of the Underwriters' Laboratories Publication No., UL96A for Lightning protection.

D) The grounding electrode system to earth resistance shall not exceed 10 Ohms, measured with a Biddle 3 terminal device or equivalent. The grounded conductor (neutral) supplied to all ac equipment on the antenna structure should be disconnected before taking measurement.

E) Actual site conditions may require longer ground rods, additional ground rods and/or land fill additives to reduce soil resistivity levels.

F) Avoid sharp bends when routing grounding wire. Grounding wires to antenna structure to be run as short and straight as possible.

G) Final grade directly above grounding electrode system to be water permeable.

8. Power/IFL Conduit Notes:

A) Electrical power - Drawing depicts suggested location for electrical power conduit to antenna. Size, type and depth to bury conduit to be determined by customer in compliance with local codes. Direction to route conduit to be determined by the relative location of communications building/shelter. Power conduit to extend 6" (minimum) above surface of foundation slab. Open ends of conduit to be sealed to prevent moisture and foreign particle contamination.

Customer to provide main load center assembly and over-current protection devices for electrical equipment. Mounting location of load center to be determined by customer in accordance with local codes.

B) For routing IFL cables, 4” size conduit recommended. Type and depth to bury conduit to be determined by customer, in compliance with local codes. Location of conduit on foundation and direction to route conduit to be determined by location of communications building/shelter. Conduit to extend 36” (minimum) above surface of foundation slab. All bends to be large radius, maximum of two bends per run. Open ends of conduit to be sealed to prevent moisture and/or foreign particle contamination.

6.0 ANTENNA GEOMETRY

6.1 Figure 3 illustrates basic dimensional characteristics and azimuth adjustment range capabilities of the 3.7-meter motorizable antenna. Figure 4 illustrates the corresponding characteristics and capabilities of the 3.7-meter antenna.

Figure 3
3.7-Meter Earth Station Antenna With Motorizable Mount

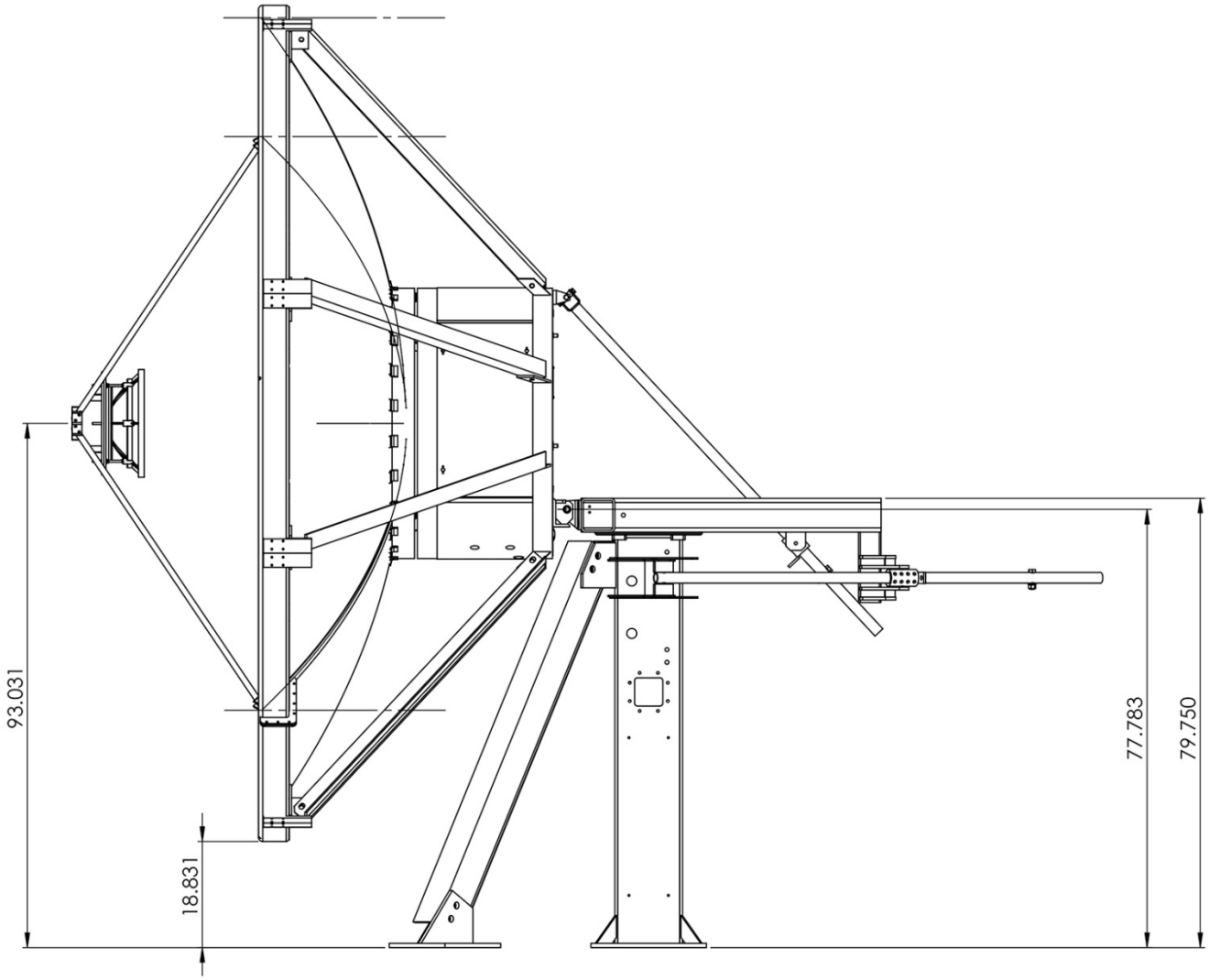

Figure 4 illustrates varying dimensions from ground reference of selected antenna points as the elevation angle fluctuates from 0° to 90°.
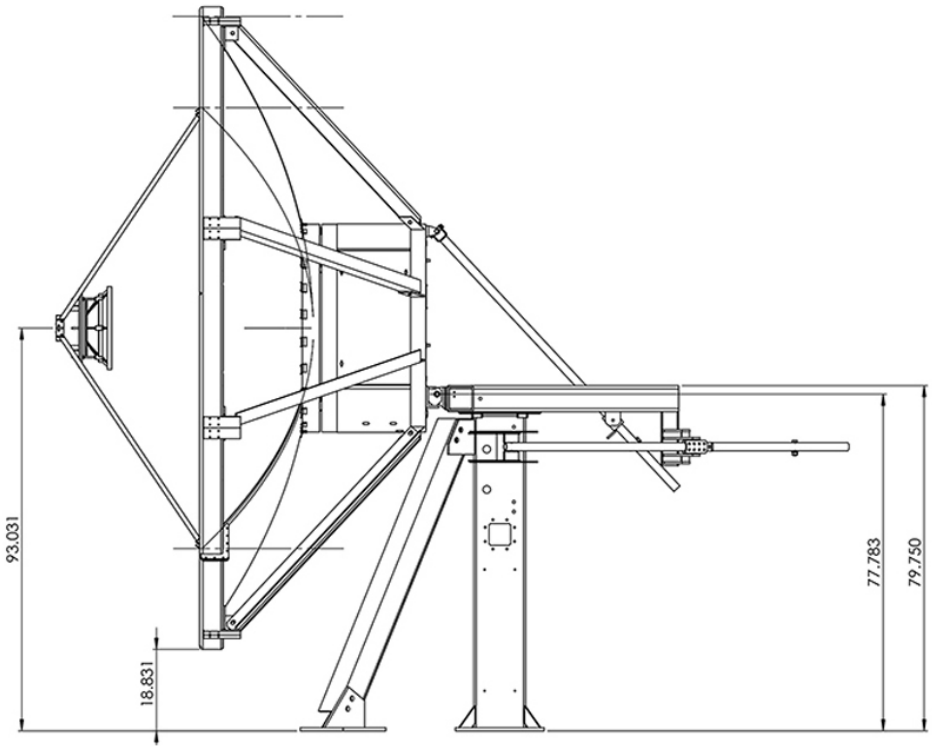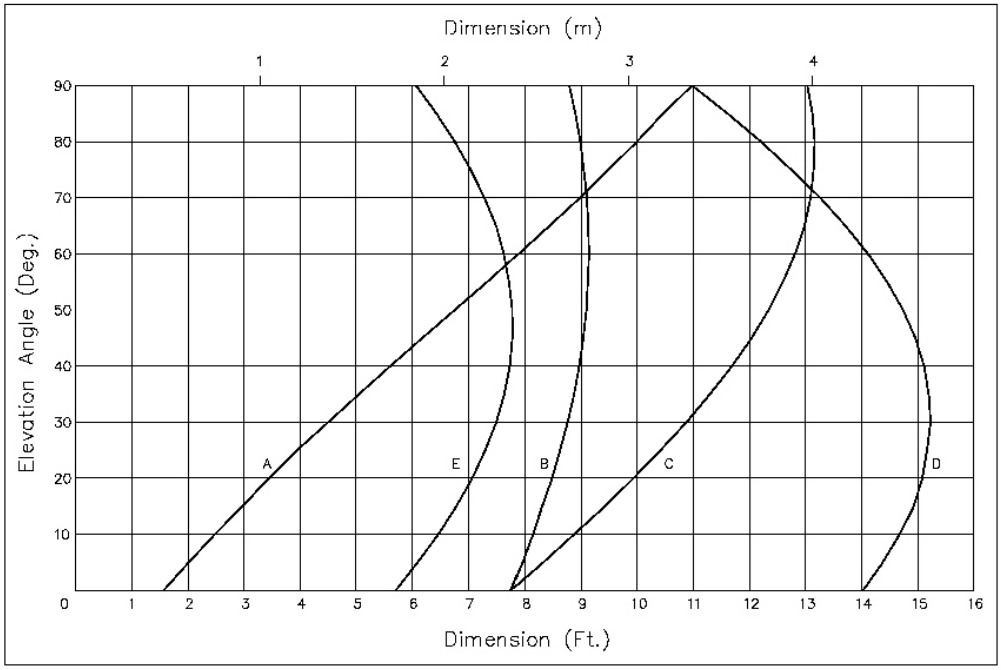
Figure 4