Foundation Specifications

for High-Wind 4.5-Meter Earth Station Antennas

1.0 INTRODUCTION

1.1 This document specifies typical foundation characteristics, designs, requirements and dimensional specifications for the Kratos high-wind 4.5-Meter Earth Station Antenna.

2.0 FOUNDATION LOADING CHARACTERISTICS

2.1 Foundation loads are applied to the three foundation pads as shown in Figure 1. Positive applied forces are in the direction of the X, Y, and Z coordinate axes.

2.2 Varying load conditions are dependent upon incident angle of the wind and elevation/azimuth angles of the antenna. Foundation loading moment for various elevation/azimuth versus wind conditions are listed in Table 1.

3.0 ANCHOR BOLT REQUIREMENTS

3.1 Typical anchor bolt installation configurations and dimensions are shown in Figure 2.

3.2 Kratos Type 201630 Anchor Bolt Kit includes anchor bolts, alignment plates and required mounting hardware as shown.

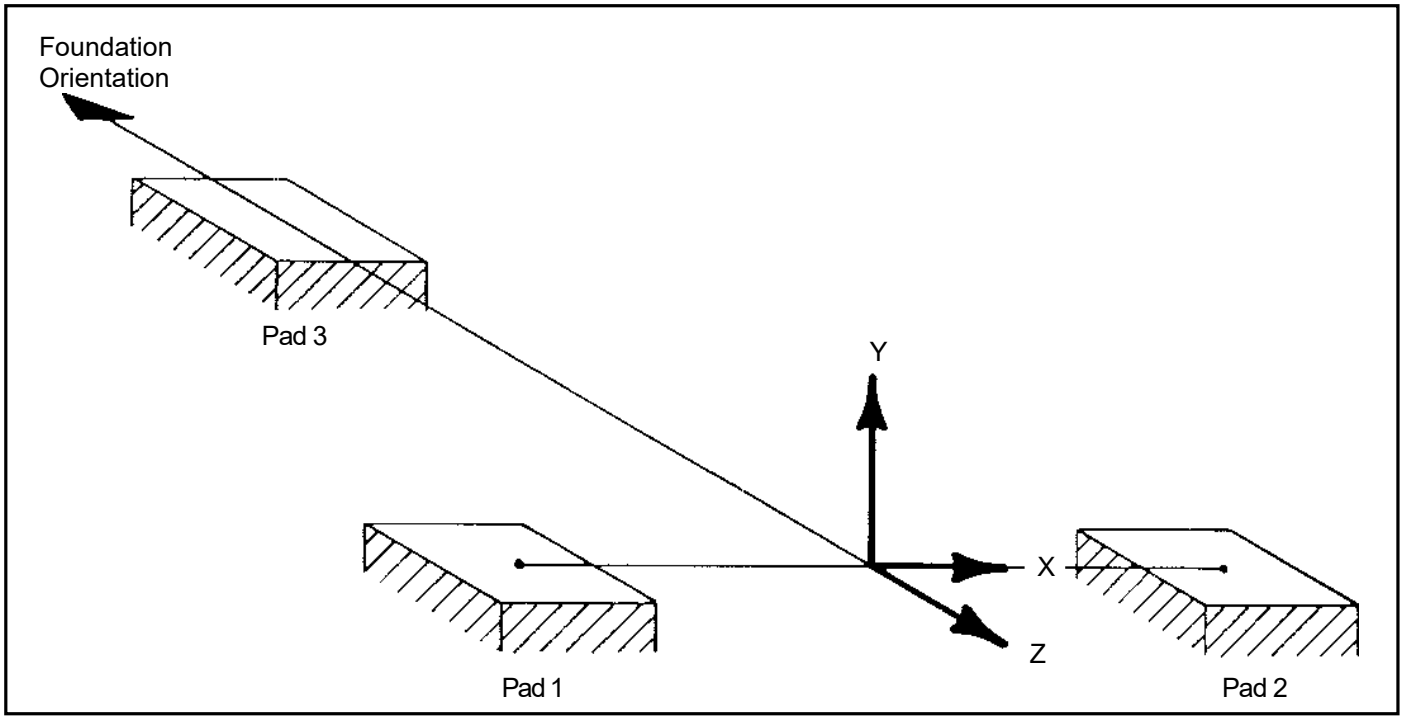

Figure 1

 Copyright 2021 Kratos Defense & Security Solutions, Inc.

EL = 0° FOUNDATION LOADING (1000 lbs)

Wind Speed (mph)	Angle (α)	Fdn. Pad No.	AZ = 0° X	AZ = 0° Y	AZ = 0° Z	AZ = -60° X	AZ = -60° Y	AZ = -60° Z	AZ = +60° X	AZ = +60° Y	AZ = +60° Z	AZ = +90° X	AZ = +90° Y	AZ = +90° Z
150	0°	1	-5.90	-13.97	8.93	Load cases for specified AZ angles do not represent "Worst Case" conditions and therefore have not been calculated.								
		2	6.34	-14.98	9.94									
		3	-0.09	25.49	-1.87									
150	60°	1	-5.90	-14.54	7.63	3.60	8.93	-8.93	-9.94	-23.76	14.26	-7.92	-19.15	11.38
		2	4.90	-11.81	9.36	9.94	-24.05	18.00	-5.04	11.95	-7.20	-8.64	20.59	-12.67
		3	0.16	23.04	-1.30	-0.65	11.66	-0.29	0.86	8.50	-0.09	1.01	-4.75	0.24
150	-60°	1	-4.90	-11.66	9.50	5.04	11.81	-6.91	-9.94	-24.05	18.43	-8.64	-21.17	16.56
		2	6.19	-14.69	7.92	9.94	-23.90	14.54	-3.60	8.64	-8.35	-7.78	18.43	-15.12
		3	-0.24	22.90	-2.16	-0.89	9.79	-0.81	0.58	11.95	-1.21	8.06	-0.58	-0.32
150	135°	1	1.12	2.02	3.89	-4.46	-11.23	12.99	5.62	12.67	-3.46	5.76	13.25	-4.46
		2	-4.75	11.23	-12.53	-5.04	12.10	-13.10	0.43	-1.15	-3.46	3.46	-8.21	0.81
		3	0.09	-16.85	2.02	1.87	-4.32	-0.14	-2.16	-14.98	0.43	-2.45	-8.50	0.00
150	180°	1	4.32	10.08	-7.06	Load cases for specified AZ angles do not represent "Worst Case" conditions and therefore have not been calculated.								
		2	-4.46	10.37	-7.06									
		3	0.00	-23.76	3.46									
150	-135°	1	4.61	11.38	-13.10	-0.29	-0.72	-4.61	5.04	12.24	-14.26	3.02	7.49	-10.66
		2	-1.05	1.87	3.17	-5.62	12.96	-4.46	4.32	-10.94	11.95	5.62	-13.82	14.26
		3	-0.09	-16.70	3.31	2.02	-15.70	2.66	-1.87	-4.75	2.02	-2.02	3.02	-0.09

EL = 30° FOUNDATION LOADING (1000 lbs)

Wind Speed	Angle	Fdn. Pad No.	AZ = 0° X	AZ = 0° Y	AZ = 0° Z	AZ = -60° X	AZ = -60° Y	AZ = -60° Z	AZ = +60° X	AZ = +60° Y	AZ = +60° Z	AZ = +90° X	AZ = +90° Y	AZ = +90° Z
150	60°	1	-4.75	-11.23	5.62	3.31	8.06	-7.92	-8.21	-19.58	11.52	-6.62	-16.27	9.50
		2	4.32	-10.51	8.35	8.21	-19.73	14.83	-3.74	8.93	-5.18	-6.91	16.27	-10.08
		3	-0.65	10.51	0.29	0.29	0.29	1.15	-0.86	-0.49	-0.09	-0.65	-11.23	-0.40
150	-60°	1	-4.32	-10.37	8.50	3.74	8.78	-4.90	-8.21	-19.73	15.26	-6.91	-16.85	13.39
		2	4.75	-11.23	5.76	8.21	-19.73	11.81	-3.31	7.92	-7.50	-6.48	15.55	-12.67
		3	0.58	10.37	-0.09	0.86	-0.43	-0.72	-0.43	0.65	0.40	-0.89	-9.79	0.29
150	135°	1	1.58	3.02	1.58	-5.62	-13.82	13.25	7.06	16.42	-7.63	7.34	17.14	-8.35
		2	-6.05	14.26	-13.10	-6.48	15.70	-14.26	0.58	-1.73	-1.73	4.32	-10.51	4.32
		3	1.44	-19.15	4.46	4.46	-3.60	0.09	-3.17	-16.42	3.17	-4.61	-8.35	1.15
150	-135°	1	5.90	14.26	-13.68	-0.58	-1.44	-2.45	6.48	15.84	-14.98	4.03	9.79	-11.09
		2	-1.44	2.88	1.15	-7.20	16.56	-8.35	5.62	-13.68	12.53	7.20	-17.71	15.12
		3	-1.58	-19.01	5.47	3.17	-17.14	4.61	-4.46	-3.89	1.58	-4.18	6.05	-1.15

EL = 60° FOUNDATION LOADING (1000 lbs)

Wind Speed	Angle	Fdn. Pad No.	AZ = 0° X	AZ = 0° Y	AZ = 0° Z	AZ = -60° X	AZ = -60° Y	AZ = -60° Z	AZ = +60° X	AZ = +60° Y	AZ = +60° Z	AZ = +90° X	AZ = +90° Y	AZ = +90° Z
150	±60°	1	-2.30	-5.47	3.46	1.73	4.03	-3.17	-4.18	-9.79	6.62	-3.46	-8.35	5.62
		2	2.30	-5.62	3.60	4.18	-9.94	6.62	-1.73	3.89	-3.17	-3.31	7.78	-5.62
		3	0.00	-6.19	2.30	2.16	-11.38	1.21	-2.16	-11.38	1.15	-2.59	-16.42	-0.09
150	120°	1	3.60	8.21	-5.62	-3.02	-7.63	5.47	6.62	15.70	-10.94	5.62	13.25	-9.50
		2	-3.74	8.50	-6.05	-6.62	15.70	-11.09	2.88	-7.20	5.04	5.62	-13.54	9.22
		3	0.09	-18.43	6.05	4.90	-9.65	2.88	-4.61	-10.08	3.02	-5.47	-1.30	0.00
150	-120°	1	3.74	8.64	-6.19	-2.88	-7.06	5.04	6.62	15.70	-11.09	5.47	12.96	-9.36
		2	-3.60	8.06	-5.62	-6.62	15.70	-10.94	3.02	-7.49	5.47	5.76	-13.82	9.50
		3	-0.09	-18.43	6.05	4.61	-10.22	3.02	-4.75	-9.94	2.88	-5.62	-0.58	-0.09

EL = 90° FOUNDATION LOADING (1000 lbs)

Wind Speed	Angle	Fdn. Pad No.	AZ = 0° X	AZ = 0° Y	AZ = 0° Z	AZ = -60° X	AZ = -60° Y	AZ = -60° Z	AZ = +60° X	AZ = +60° Y	AZ = +60° Z	AZ = +90° X	AZ = +90° Y	AZ = +90° Z
150	90°	1	-2.42	-5.76	3.74	1.87	4.32	-3.46	-4.32	-10.51	7.06	-3.60	-8.93	6.05
		2	2.42	-5.90	3.74	4.32	-10.66	7.06	-1.87	4.32	-3.46	-3.60	8.35	-6.05
		3	-0.09	9.79	-4.46	-3.60	4.18	-2.02	3.47	4.32	-2.30	4.03	-1.30	0.00

Table 1

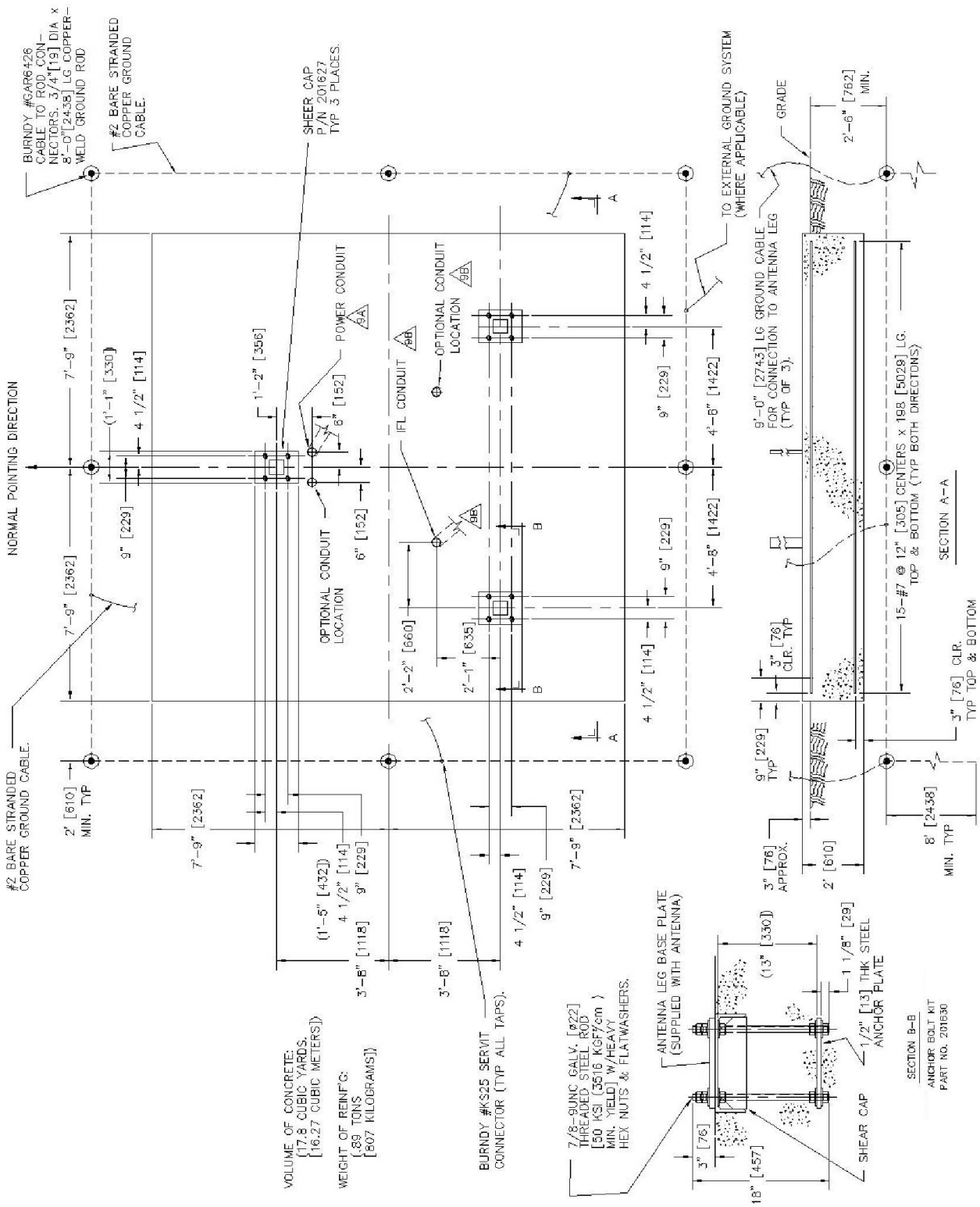

Foundation Layout – Slab
4.5-Meter Earth Station Antenna
Figure 2

General Notes - Figure 2

1. Remove all burrs and sharp edges.
2. Dimensions apply before plating.
3. Interpret drawing per ANSI YI 4.5M-1 982.
4. Dimensions are shown in feet and inches. Dimensions in brackets [ ] are in millimeters.
5. A tolerance of ±1/8" [3] applies to all anchor bolt layout dimensions.
6. Level all shear caps individually and to within ±1/4" [6] of each other.
7. **Foundation Notes:**
   - A) This foundation is a typical design only. Certification of its suitability for a particular installation by a professional engineer is required prior to its use for actual fabrication.
   - B) Contractor shall field verify all dimensions locating existing construction before fabrication of new construction begins.
   - C) Concrete and related work shall be mixed, placed and cured in accordance with "Building Code Requirements for Reinforced Concrete" ACI 318-89 (Rev. 88) and "Specifications for Structural Concrete" ACI 301-84 (Rev. 88) publication SP-15 (88).
   - D) Concrete for foundations shall develop a compressive strength of at least 3000 psf [211 kgf/cm^2 in 28 days with a maximum slump of 3" [76) at time of placing.
   - E) Reinforcing bars shall conform to ASTM A 615 [S1] grade 60 deformed type Fy = 60000 psi [4219 kgf/cm^2].
   - F) Unless otherwise noted, concrete cover of reinforcing bars shall conform to minimum requirements of ACI 318- 89 (Rev. 88).
   - G) Fabrication of reinforcing steel shall be in accordance with "Manual of Standard Practice for Detailing Reinforcing Concrete Structures" ACI 315-80 (Rev. 86).
   - H) Provide 3/4" x 45° [19 x 45°] chamfer on all exposed concrete edges.
   - J) Foundations have been designed to rest on undisturbed soil (per EIA-411-A and RS-222-D) with a minimum allowable net vertical bearing capacity of 2000 psf [9770 kgf/m^2]. If undesirable soil conditions are encountered, the engineer shall be notified.
   - K) Backfills shall be suitable excavated material or other suitable material compacted in 6" lifts to 90% of maximum density as determined by ASTM D1557.
   - L) If this foundation is to be located in an area where annual frost penetration depth exceeds 21" [533], the local building code specifying a minimum required foundation depth should be consulted.
8. **Grounding Electrode System Notes:**

   The grounding system shown represents the minimum requirements to achieve satisfactory grounding. Actual site conditions and soil resistivity levels will determine final grounding system design to comply with the following:
   - A) All ground ring, ground rod and antenna structure connections to be ERICO® products, Inc. Calweld® exothermic type welded electrical connections or equivalent.
   - B) Ground rods shall be driven to a depth below permanent moisture level (minimum depth shown) as dictated by geographical location.
   - C) The antenna structure shall be connected to a grounding electrode system consisting of a number of interconnected ground rods. The system shall meet the requirements of the Underwriters' Laboratories Publication No. UL96A for Lightning protection.
   - D) The grounding electrode system to earth resistance shall not exceed 10 Ohms, measured with a Biddle 3 terminal device or equivalent. The grounded conductor (neutral) supplied to all ac equipment on the antenna structure should be disconnected before taking measurement.
   - E) Actual site conditions may require longer ground rods, additional ground rods and/or land fill additives to reduce soil resistivity levels.
   - F) Avoid sharp bends when routing grounding wire, Grounding wires to antenna structure to be run as short and straight as possible.
   - G) Final grade directly above grounding electrode system to be water permeable.
9. **Power/IFL Conduit Notes:**
   - A) Electrical power - Drawing depicts suggested location for electrical power conduit to antenna. Size, type and depth to bury conduit to be determined by customer in compliance with local codes. Direction to route conduit to be determined by the relative location of communications building/shelter. Power conduit to extend 6" (minimum) above surface of foundation slab.

     Open ends of conduit to be sealed to prevent moisture and foreign particle contamination. Customer to provide main load center assembly and overcurrent protection devices for electrical equipment. Mounting location of load center to be determined by customer in accordance with local codes.
   - B) IFL cable - Drawing depicts suggested location for IFL conduit. Conduit required only if no other means for routing IFL cables is provided. Size, type and depth to bury conduit to be determined by customer in compliance with local codes. Direction to route conduit to be determined by the relative location of communications building/shelter. IFL conduit to extend 36" (minimum) above surface of foundation slab. All bends to be large radius with a minimum of (2) 90° bends per run. Open ends of conduit to be sealed to prevent moisture and foreign particle contamination.

4.0 FOUNDATION DESIGNS

4.1 The selected foundation for a particular site is dependent upon local conditions. Soil borings and foundation analysis should be performed by a qualified civil engineer.

4.2 A typical design for a slab type foundation is shown in Figure 2. Copies of these designs are available from Kratos on request. Refer to Drawing Number 300311.

5.0 FOUNDATION ORIENTATION

5.1 Proper foundation orientation is required to obtain the desired orbital arc coverage from a particular site location.

The required azimuth and elevation angles of the antenna, relative to the mount must be determined to establish the appropriate foundation orientation. A specific foundation orientation requirement may be requested with the antenna as part of the installation package.

6.0 ANTENNA GEOMETRY – Standard Feed

6.1 Basic dimensional characteristics and azimuth adjustment range capabilities are shown in Figure 3.

6.2 Figure 4 illustrates varying dimensions from ground reference of selected antenna points as the elevation angle fluctuates from 5 to 90°.

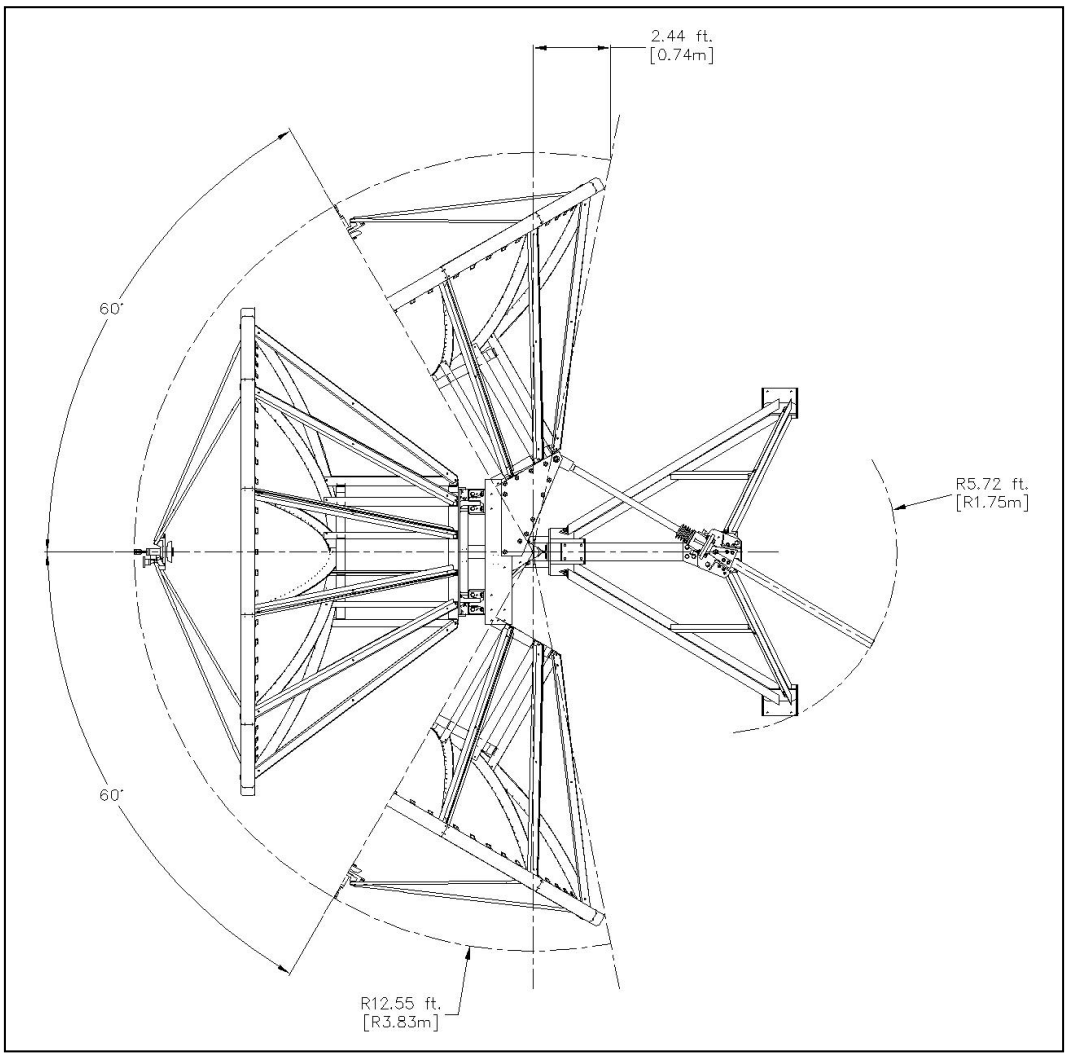

Figure 3

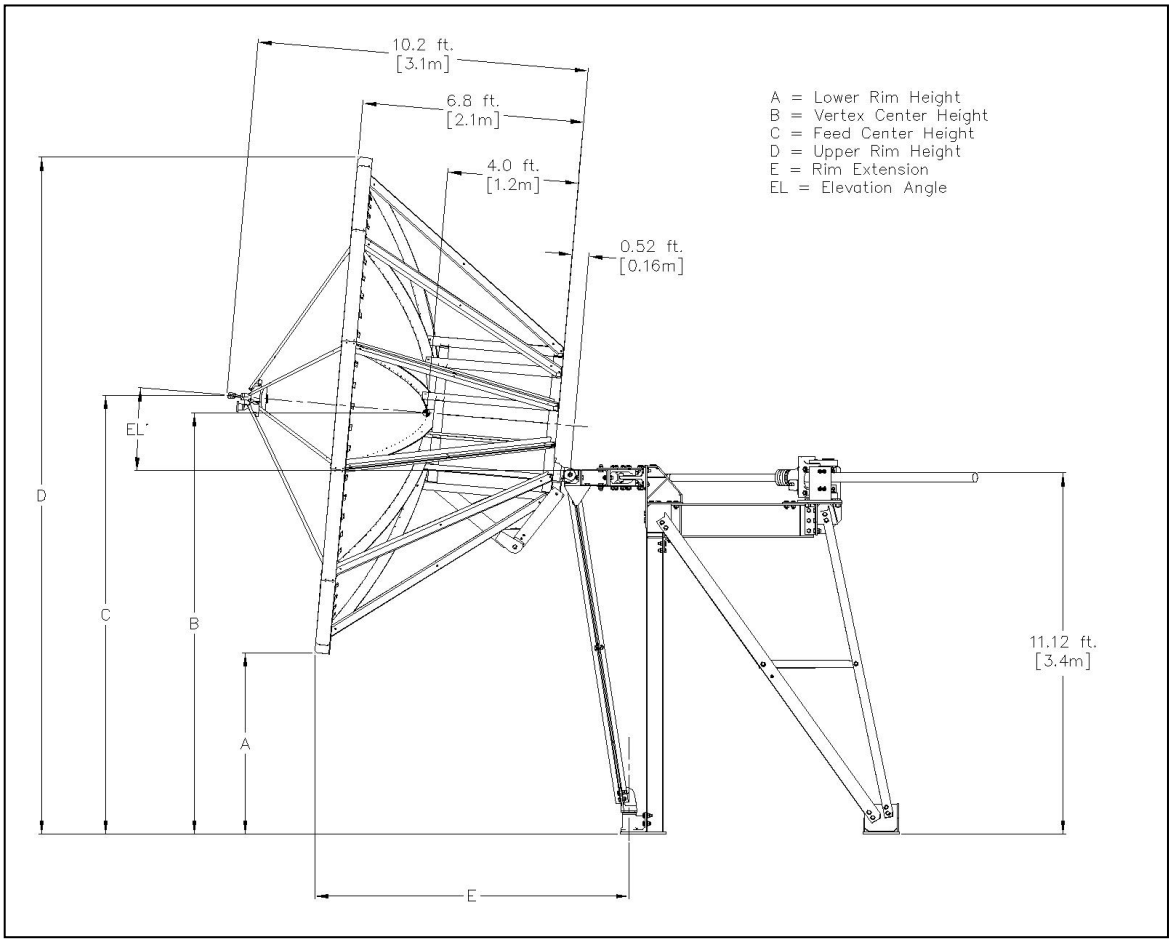
10.2 ft.
[3.1m]
6.8 ft.
[2.1m]
4.0 ft.
[1.2m]
0.52 ft.
[0.16m]
A = Lower Rim Height
B = Vertex Center Height
C = Feed Center Height
D = Upper Rim Height
E = Rim Extension
EL = Elevation Angle
EL
D
C
B
A
E
11.12 ft.
[3.4m]

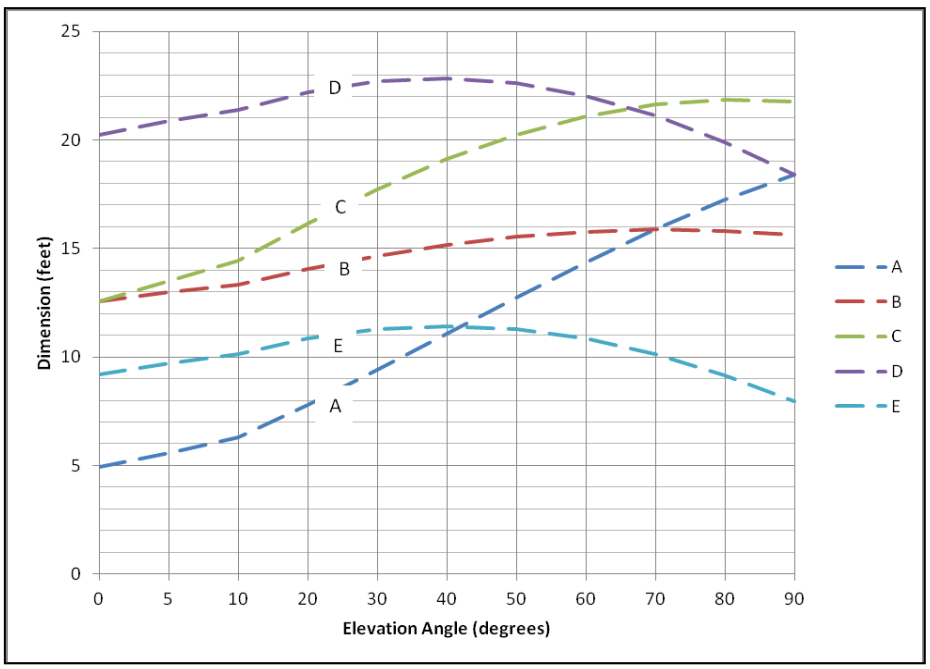
Dimension (feet)
Elevation Angle (degrees)
0
5
10
15
20
25
0
5
10
20
30
40
50
60
70
80
90
A
B
C
D
E

Figure 4

7.0 ANTENNA GEOMETRY – PF Feed

7.1 Basic dimensional characteristics and azimuth adjustment range capabilities are shown in Figure 5.

7.2 Figure 6 illustrates varying dimensions from ground reference of selected antenna points as the elevation angle fluctuates from 5 to 90°.

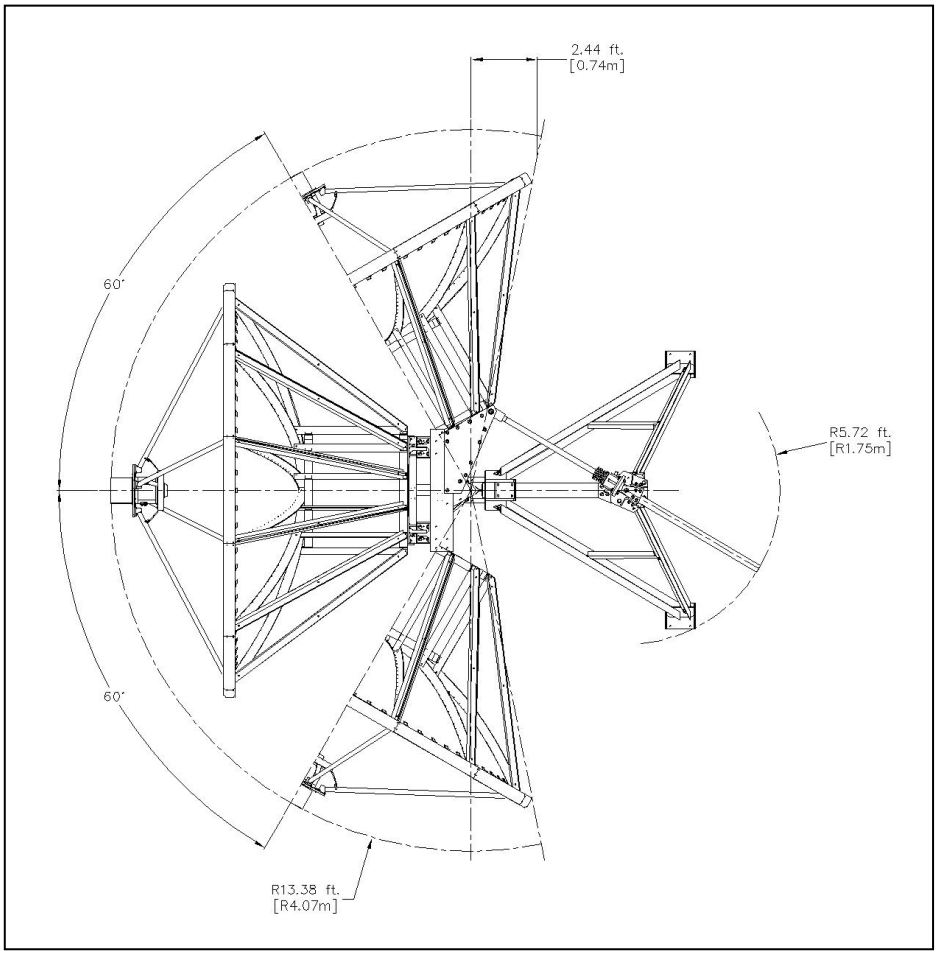

Figure 5

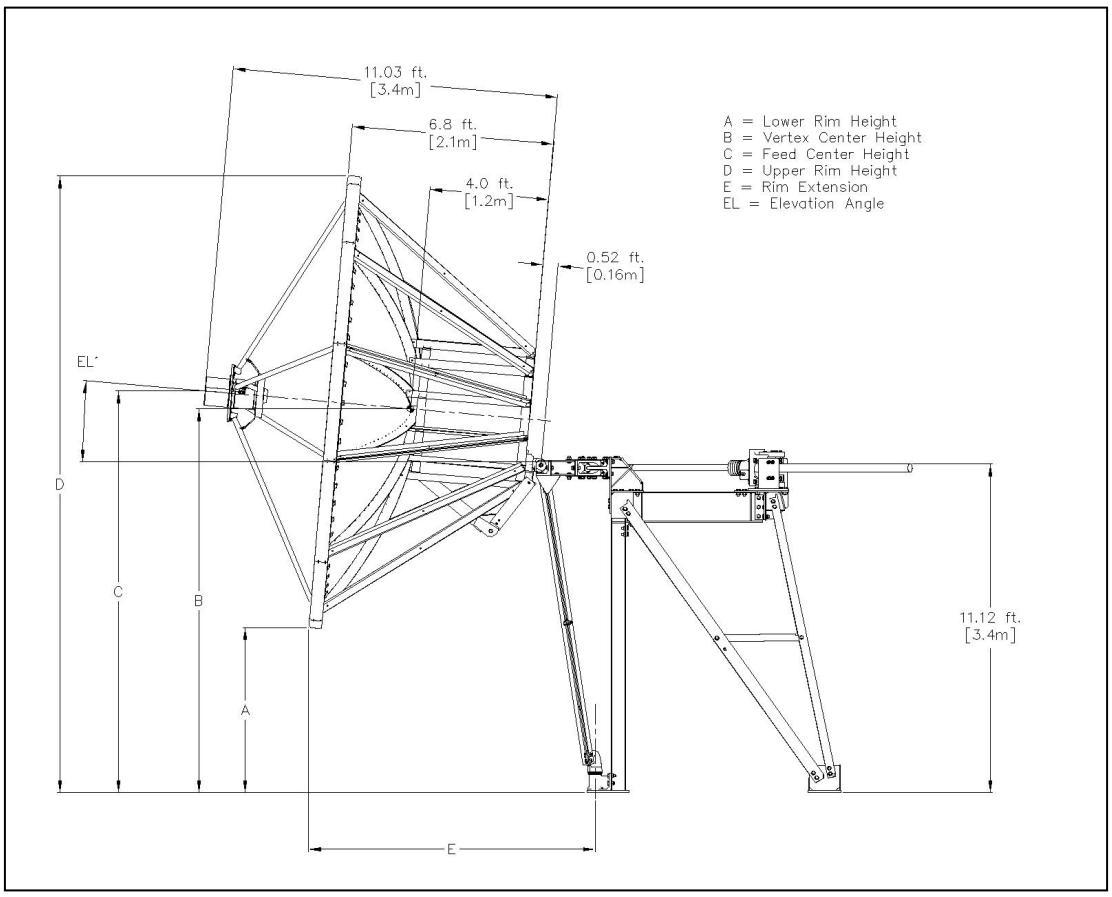
11.03 ft.
[3.4m]
6.8 ft.
[2.1m]
4.0 ft.
[1.2m]
0.52 ft.
[0.16m]
A = Lower Rim Height
B = Vertex Center Height
C = Feed Center Height
D = Upper Rim Height
E = Rim Extension
EL = Elevation Angle
EL´
D
C
B
A
E
11.12 ft.
[3.4m]

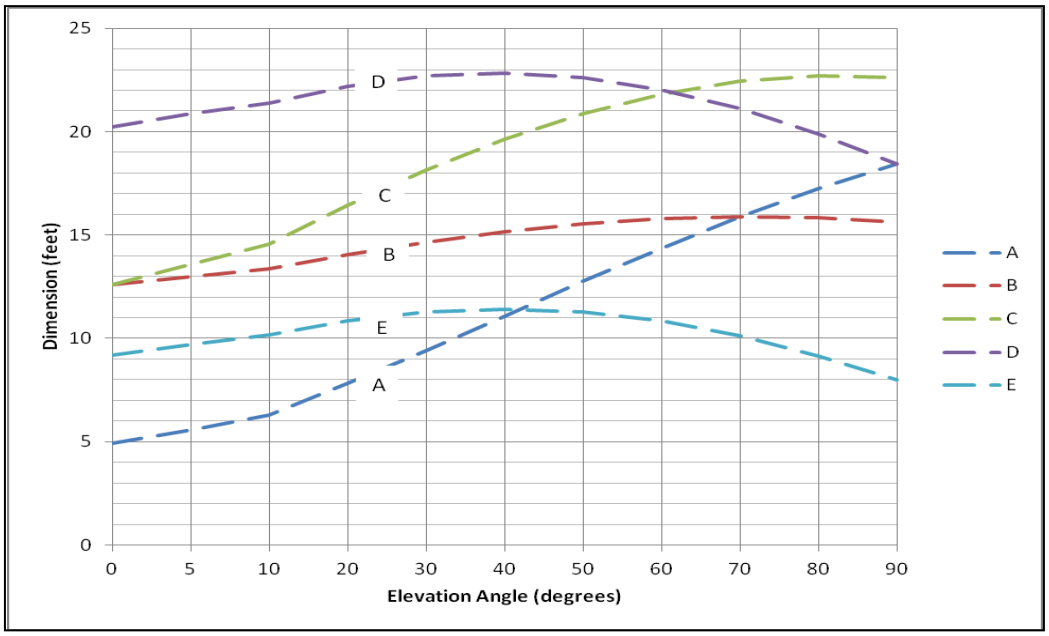
Dimension (feet)
Elevation Angle (degrees)
0
5
10
15
20
25
0
5
10
20
30
40
50
60
70
80
90
A
B
C
D
E

Figure 6

ANTENNA POINTING CALCULATIONS

This section contains the formulas for determining the pointing capabilities of the 4.5-meter earth station antenna.

Formulas for calculating true azimuth (AZ), true elevation (EL), relative angle between true azimuth and mount pointing angle (dAZ) and strut lengths of the earth station are given below:

Given the earth station latitude, longitude, azimuth setting of mount (AZm) and satellite longitude (over the equator), the following calculations can be made:

For earth stations north of the equator:

$$AZ = 180° + \arctan(\tan\theta/\sin\alpha)$$

For earth stations south of the equator:

$$AZ = 360° - \arctan(\tan\theta/\sin\alpha)$$

Where:

AZ = true azimuth to view satellite, in degrees East (clockwise) of True North.
α= earth station latitude in degrees.
θ = satellite longitude minus earth station longitude, in degrees.

NOTE: Earth station latitude values are positive for sites located north of the equator and negative for sites south of the equator. Longitude values are positive for earth station sites or satellite positions west of Greenwich and negative east of Greenwich.

$$dAZ = AZ - AZm$$

Where:

AZm = azimuth at which mount is set in degrees East (clockwise) of True North
dAZ = relative angle between true azimuth angle looking at satellite and mount pointing direction in degrees.
EL = 90° - T - R

Where:

EL = true elevation angle to view satellite in degrees
$R = \arccos(\cos\theta \cos\alpha)$
$T = \arctan[\sin R/(6.6166-\cos R)]$

Pin-to-pin length of elevation strut in inches:

Equation (1): $XEL = \sqrt{15449.8552 - 7926.1941 [\cos(43.4283° + EL)]}$

For the -90° to +30° dAZ Range:

Pin-to-pin length of azimuth strut in inches:

Equation (2): $LAZ = \sqrt{6084.1406 - 5019.75 [\cos(105° - dAZ)]}$

For the -60° to +60° dAZ Range:

Pin-to-pin length of azimuth strut in inches:

Equation (3): $LAZ = \sqrt{6084.1406 - 5019.75 [\cos(75° - dAZ)]}$

For the -30° to +90° dAZ Range:

Pin-to-pin length of azimuth strut in inches:

Equation (4): $LAZ = \sqrt{6084.1406 - 5019.75 [\cos(105° - dAZ)]}$