Foundation Specifications

For 4.0 Meter Earth Station Antenna

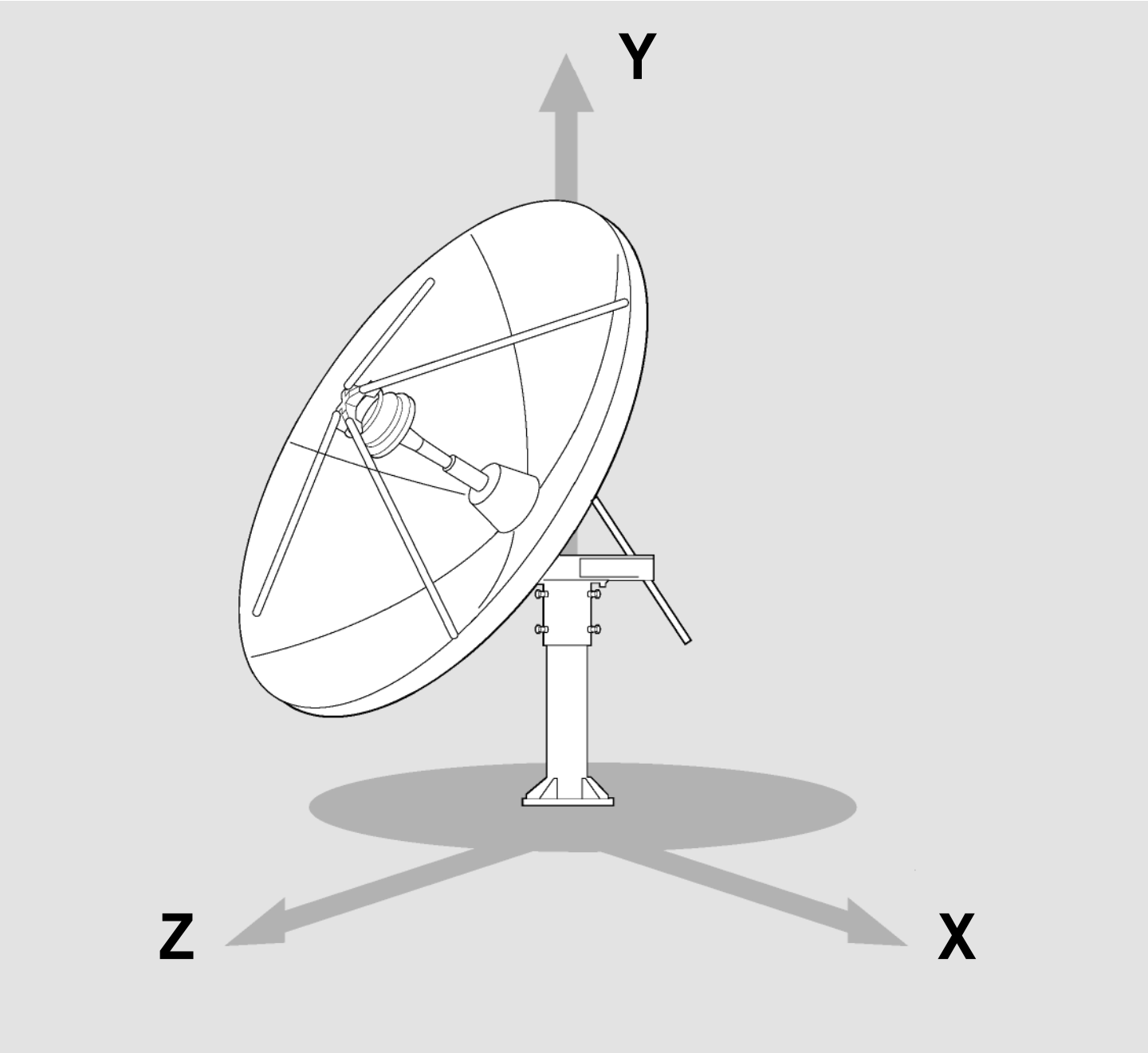

Copyright 2021 Kratos Defense & Security Solutions, Inc.

1.0 INTRODUCTION

1.1 This document specifies typical characteristics, designs, requirements and dimensional specifications for the Kratos 4.0 Meter Earth Station Antennas.

2.0 FOUNDATION LOADING CHARACTERISTICS

2.1 Foundation loads are applied to the foundation pad, piers or pipe as shown in Figures 3, 4 and 5. Positive applied forces are in the direction of the X, Y, and Z coordinate axes. (See cover page for positive axes direction).

2.2 Varying load conditions are dependent upon icing, incident angle of the wind and elevation/azimuth angles of the antenna. Foundation loading forces and moments for various elevation versus wind conditions are listed in Table 1.

Load Case	Reflector Position	Fx lb (kN)	Fy lb (kN)	Fz lb (kN)	Mx ft-lb (N-m)	My ft-lb (N-m)	Mz ft-lb (N-m)
Shelf Weight	0 Deg Elevation	0 (0.00)	-1,600 -(7.12)	0 (0.00)	400 (542)	(0)	(0)
125 mph+Self (200 km/h) 0 Deg wind	0 Deg Elevation	0 (0.00)	-1,600 -(7.12)	-9,484 -(42.19)	-66,780 -(90541)	0 (0)	0 (0)
125 mph+Self (200 km/h) 60 Deg wind	0 Deg Elevation	1,660 (7.38)	-1,600 -(7.12)	-10,433 -(46.41)	-73,498 -(99649)	-4,070 -(5518)	-11,756 -(15940)
125 mph+Self (200 km/h) 120 Deg wind	0 Deg Elevation	2,845 (12.66)	-1,600 -(7.12)	2,845 (12.66)	20,554 (27867)	17,977 (24374)	-20,154 -(27325)
125 mph+Self (200 km/h) 180 Deg wind	0 Deg Elevation	0 (0.00)	-1,600 -(7.12)	6,165 (27.42)	44,067 (59747)	0 (0)	0 (0)

3.0 ANCHOR BOLT REQUIREMENTS

3.1 Typical anchor bolt installation configurations and dimensions are shown in Figure 2.

3.2 Kratos Type 302689 Anchor Bolt Kit includes anchor bolts, alignment plate and required mounting hardware (As shown).

4.0 FOUNDATION DESIGNS

4.1 The selected foundation for a particular site is dependent upon local conditions. Soil borings and foundation analysis should be performed by a qualified civil engineer.

4.2 A typical slab type foundation is shown in Figure 3.

4.3 An enlarged copy of this design is available from Kratos on request. Refer to drawing number 7547095

4.4 A typical pier type foundation is shown in Figure 4. An enlarged copy of this design is available from Kratos on request. Refer to drawing number 7547096.

4.5 A typical Pipe foundation is shown in Figure 5. An enlarged Pipe foundation is shown in drawing number 7547336.

5.0 FOUNDATION ORIENTATION

5.1 Proper foundation orientation is required to obtain the desired orbital arc coverage from a particular site location. The required azimuth and elevation angles of the antenna, relative to the mount must be determined to establish the appropriate foundation orientation. A specific foundation orientation requirement may be requested with the antenna as part of the installation package.

6.0 GENERAL NOTES

6.1 ANCHOR BOLT NOTES;

6.1.1 Remove all burrs and sharp edges.

6.1.2 Dimensions apply before plating.

6.1.3 Interpret drawing per ANSI Y 14.5M-1982

6.1.4 Dimensions are shown in feed and inches. Dimensions in brackets [ ] are in millimeters.

6.1.5 A tolerance of ± 1/8" (±3 mm) applies to all anchor bolt layout dimensions.

6.2 GENERAL NOTES FOR PAD FOUNDATION

A) This foundation is a typical design only. Certification of its suitability for a particular installation by a professional engineer is required prior to its use for actual fabrication.
B) Contractor shall field verify all dimensions locating existing construction before fabrication of new construction begins.

6.2.1 THIS FOUNDATION HAS BEEN DESIGNED FOR 4.0 METER EARTH STATION DISH ANTENNA. BASE REACTIONS AS FURNISHED BY KRATOS FOUNDATION SPECIFICATIONS ESA REACTIONS DOCUMENT 84143 WITH THE FOLLOWING REACTIONS COMBINATION CONTROLLING:

COMBO A:	COMBO B:
COMRESSION = 1.50 KIPS (6.67 kN)	COMRESSION = 10.62 KIPS (47.24 kN)
HORIZONTAL = 10.71 KIPS (47.64 kN)	HORIZONTAL = 5.56 KIPS (0.02 kN)
MOMENT = 49.43 FT-KIPS (67.02 kN m)	MOMENT = 22.03 FT-KIPS (29.87 kN m)

6.2.2 Foundation has been designed based on conservative soil parameters with a minimum allowable bearing pressure of 2.00 ksf (95.76 kPa) at 2 ft (0.60 m) depth with groundwater below foundation bottom. Field verification of these parameters is required before installation of foundation.

6.2.3 Contact the engineer concerning any changes in the installation due to any difference of the on-site existing conditions.

6.2.4 Check area for location of underground pipes, cables conduit, etc. prior to starting excavation. Contractor should be familiar to geotechnical report prior to excavation.

6.2.5 All work shall be in accordance with local codes and safety regulations requirements. Procedures for protection of excavations, existing construction and utilities shall be established prior to start of foundation work. Follow applicable OSHA guidelines 29cfr, part 1926, subpart p. All shoring & bracing requirements are the sole responsibility of the contractor.

6.2.6 This design assumes frost depth above foundation bottom and finish grade at site to be same as existing grade. Structural engineer must be notified if any cut or fill is required to achieve final grade requirements. Adjust depth as required for frost depth requirements.

6.2.7 All grounding required shall be by others.

6.2.8 All concrete work shall conform to ACI 318 building code requirements for reinforced concrete. All concrete shall have a minimum 28-day compressive strength of 3000 psi (143.64 kPa). Cement shall be Portland cement conforming to ASTM c150 - type I unless otherwise approved.

6.2.9 All reinforcing steel bars shall be domestic, new billet steel, ASTM a615, grade 60. Reinforcing shall be detailed and fabricated in accordance with “manual of standard for detailing reinforced concrete”. (ACI 315-latest edition).

6.2.10 Welding of reinforcing steel and embedments is prohibited unless otherwise approved by engineer.

6.2.11 Concrete coverage over all steel shall conform to ACI 318 building code minimum requirements and as shown on structural details.

6.2.12 Inspect bottom of excavation prior to placing steel cage and concrete to insure no large amounts of loose dirt or foreign material remains.

6.2.13 Spacing devices shall be used as required to maintain the side clearance between the steel reinforcement and excavation wall.

6.2.14 All anchor rods shall be furnished by the dish manufacturer. Anchor rods shall be set with templates furnished by the dish manufacturer. Template must be securely double-nutted to anchor rods during concrete installation and must be level ±1/4” (±3 mm). Install template with sufficient space beneath to permit finishing of concrete and to facilitate template removal prior to dish erection.

6.2.15 Concrete shall be placed into excavation within 8 to 12 hours of excavation with the use of a chute or hopper device to direct the concrete to fall within the center of the steel cage. Concrete slump shall not be less than 4” (100 mm) nor more than 5” (127 mm). Concrete shall not be allowed to hit the steel cage which would cause separation of the material.

6.2.16 Vibrate the top of concrete in order to achieve proper compaction. Slope top of concrete as required for proper drainage away from antenna base. Proper drainage away from antenna base. Slope top of concrete as required for proper drainage away from antenna base.

6.2.17 Backfill shall be placed in 9” - 12” (230 mm - 305 mm) horizontal lifts and compacted to a minimum 95 percent of the maximum dry density in accordance with ASTM test designation d-1557 (modified proctor). The fill materials shall be free from large rocks, waste, and debris and shall be placed at or near the optimum moisture content.

6.3 GENERAL NOTES FOR PIER FOUNDATION

6.3.1 THIS FOUNDATION HAS BEEN DESIGNED FOR 4.0 METER EARTH STATION DISH ANTENNA. BASE REACTIONS AS FURNISHED BY KRATOS FOUNDATION SPECIFICATIONS ESA REACTIONS DOCUMENT 84143 WITH THE FOLLOWING REACTIONS COMBINATION CONTROLLING:

COMBO A:	**COMBO B:**
COMRESSION = 1.50 KIPS (6.67 kN)	COMRESSION = 10.62 KIPS (47.24 kN)
HORIZONTAL = 10.71 KIPS (47.64 kN)	HORIZONTAL = 5.56 KIPS (0.02 kN)
MOMENT = 49.43 FT-KIPS (67.02 kN m)	MOMENT = 22.03 FT-KIP (29.87 kN)

6.3.2 Foundation has been designed based on conservative soil parameters with a cohesion of 1.50 ksf (71.82 kPa) or angle of friction of 32° with ground water below foundation bottom. Field verification of these parameters is required before installation of foundation.

6.3.3 Contact the engineer concerning any changes in the installation due to any difference of the on-site existing conditions.

6.3.4 Check area for location of underground pipes, cables conduit, etc. prior to starting excavation. Contractor should be familiar to geotechnical report prior to excavation.

6.3.5 All work shall be in accordance with local codes and safety regulations requirements. Procedures for protection of excavations, existing construction and utilities shall be established prior to start of foundation work. Follow applicable OSHA guidelines 29cfr, part 1926, subpart p. All shoring & bracing requirements are the sole responsibility of the contractor.

6.3.6 Pier foundation shall be constructed in accordance with ACI 336.3r “design and construction of drilled piers” - latest edition. Contractor should be familiar to geotechnical report prior to drilling.

6.3.7 This design assumes frost depth above foundation bottom and finish grade at site to be same as existing grade. Structural engineer must be notified if any cut or fill is required to achieve final grade requirements. Adjust depth as required for frost depth requirements.

6.3.8 All grounding required shall be by others.

6.3.9 All concrete work shall conform to ACI318 building code requirements for reinforced concrete. All concrete shall have a minimum 28-day compressive strength of 3000 psi (143.64 kPa). Cement shall be Portland cement conforming to ASTM c150 - type I unless otherwise approved.

6.3.10 All reinforcing steel bars shall be domestic, new billet steel, ASTM a615, Grade 60. Reinforcing shall be detailed and fabricated in accordance with “manual of standard for detailing reinforced concrete”. (ACI 315-latest edition)

6.3.11 Welding of reinforcing steel and embedments is prohibited unless otherwise approved by engineer.

6.3.12 Concrete coverage over all steel shall conform to ACI 318 building code minimum requirements and as shown on structural details.

6.3.13 Pier hole shall be drilled plumb and true. A tolerance of 2% out of plumb will be permitted.

6.3.14 Inspect bottom of excavation prior to placing steel cage and concrete to insure no large amounts of loose dirt or foreign material remains.

6.3.15 Spacing devices shall be used as required to maintain the side clearance between the steel reinforcement and excavation wall.

6.3.16 All reinforcing steel shall be tied and placed into a cage prior to setting into position in excavated hole and before start of concrete placement. Spacing and centering devices shall be used as required to maintain proper alignment of rebar cage with the shaft and to ensure adequate concrete coverage. The rebar cage shall be internally braced and fastened within the caisson hole to prevent lateral and vertical movement during placement of concrete.

6.3.17 All anchor rods shall be furnished by the dish manufacturer. Anchor rods shall be set with templates furnished by the dish manufacturer. Template must be securely double-nutted to anchor rods during concrete installation and must be level ±1/4” (±3 mm). Install template with sufficient space beneath to permit finishing of concrete and to facilitate template removal prior to dish erection.

6.3.18 Concrete shall be placed into excavation within 8 hours of excavation with the use of a chute, tremie, or hopper device to direct the concrete to fall within the center of the steel cage while limiting the freefall to less than 3 ft (1 m). Concrete slump shall not be less than 5” (127 mm) nor more than 8” (203 mm). Concrete shall not be allowed to hit the steel cage, which would cause segregation of the material.

6.3.19 Concrete shall be properly consolidated by vibration to remove air voids. Vibration shall be in accordance with ACI 309 “standard practice for consolidation of concrete. Slope top of concrete as required for proper drainage.

6.3.20 Backfill shall be placed in 9” - 12” (230 mm - 305 mm) horizontal lifts and compacted to a minimum 95 percent of the maximum dry density in accordance with ASTM test designation d-1557 (modified proctor). The fill materials shall be free from large rocks, waste, and debris and shall be placed at or near the optimum moisture content.

6.4 GENERAL NOTES FOR PIPE FOUNDATION

6.4.1 THIS FOUNDATION HAS BEEN DESIGNED FOR 4.0 METER EARTH STATION DISH ANTENNA. BASE REACTIONS AS FURNISHED BY KRATOS FOUNDATION SPECIFICATIONS ESA REACTIONS DOCUMENT #84143 WITH THE FOLLOWING REACTIONS COMBINATION CONTROLLING:

COMBO A: **COMBO B:**

COMRESSION = 1.50 KIPS (6.67 kN)	COMRESSION = 10.62 KIPS (47.24 kN)
HORIZONTAL = 0.71 KIPS (47.64 kN)	HORIZONTAL = 5.56 KIPS (0.02 kN)
MOMENT = 49.43 FT-KIPS (67.02 kN m)	MOMENT = 22.03 FT-KIPS (29.87 kN)

6.4.2 Foundation has been designed based on conservative soil parameters with a cohesion of 1.50 ksf (71.82 kPa) or angle of friction of 32° with ground water below foundation bottom. Field verification of these parameters is required before installation of foundation.

6.4.3 Allow a min. of 48 hours of concrete curing before antenna installation.

6.4.4 Contact the engineer concerning any changes in the installation due to any difference of the on-site existing conditions.

6.4.5 Check area for location of underground pipes, cables conduit, etc. prior to starting excavation. Contractor should be familiar to geotechnical report prior to excavation.

6.4.6 All work shall be in accordance with local codes and safety regulations requirements. Procedures for protection of excavations, existing construction and utilities shall be established prior to start of foundation work. Follow applicable OSHA guidelines 29cfr, part 1926, subpart p. All shoring & bracing requirements are the sole responsibility of the contractor.

6.4.7 Pier foundation shall be constructed in accordance with ACI 336.3r "design and construction of drilled piers" - latest edition. Contractor should be familiar to geotechnical report prior to drilling.

6.4.8 This design assumes frost depth above foundation bottom and finish grade at site to be same as existing grade. Structural engineer must be notified if any cut or fill is required to achieve final grade requirements. Adjust depth as required for frost depth requirements.

6.4.9 All grounding required shall be by others.

6.4.10 All concrete work shall conform to ACI 318 building code requirements for reinforced concrete. All concrete shall have a minimum 28-day compressive strength of 3000 psi (143.64 kPa). Cement shall be Portland cement conforming to ASTM c150 - type I unless otherwise approved.

6.4.11 Pier hole shall be drilled plumb and true. A tolerance of 2% out of plumb will be permitted.

6.4.12 Inspect bottom of excavation prior to placing steel embedment and concrete to insure no large amounts of loose dirt or foreign material remains.

6.4.13 Spacing devices shall be used as required to maintain the side clearance between the steel embedment and excavation wall.

6.4.14 Concrete shall be placed into excavation within 8 hours of excavation with the use of a chute, tremie, or hopper device to direct the concrete to fall within the center of the excavation while limiting the freefall to less than 3 ft (1 m). Concrete slump shall not be less than 5" (127 mm) nor more than 8" (203 mm).

6.4.15 Concrete shall be properly consolidated by vibration to remove air voids. Vibration shall be in accordance with ACI 309 "standard practice for consolidation of concrete. Slope top of concrete as required for proper drainage.

6.4.16 Backfill shall be placed in 9" - 12" (230 mm - 305 mm) horizontal lifts and compacted to a minimum 95 percent of the maximum dry density in accordance with ASTM test designation d-1557 (modified proctor). The fill materials shall be free from large rocks, waste, and debris and shall be placed at or near the optimum moisture content.

6.4.17 All steel fabrication and installation shall be done in accordance with the American Institute of Steel construction manual and specifications.

6.4.18 All steel angle members shall conform to ASTM a36 (36 ksi (1.72 MPa) minimum yield strength) and steel pipe members shall conform to ASTM a500 GR.C (50 ksi minimum yield strength) steel specifications.

6.4.19 All welding shall be done using e-70 electrodes and in accordance with the American Welding Society (A.W.S.) standards and specifications, ANSI/AWS d1.1.

6.4.20 Base material shall be correctly preheated before welding and post heated after welding in accordance with the AWS specifications.

7.0 GROUNDING ELECTRODE SYSTEM NOTES:

The grounding system shown represents the minimum requirements to achieve satisfactory grounding. Actual site conditions and soil resistivity levels will determine final grounding system design to comply with the following:

A) All ground rod and antenna structure connections to be EIRCO® products, Inc. Calweld® exothermic type welded electrical connections or equivalent.

B) Ground rods shall be driven to a depth below permanent moisture level (minimum depth shown) as dictated by geographical location.

C) The antenna structure shall be connected to a grounding electrode system consisting of a number of interconnected ground rods. The system shall meet the requirements of the Underwriter's Laboratories Publication No. UL96A for Lightning protection.

D) The grounding electrode system to earth resistance shall not exceed 10 Ohms, measured with a Biddle 3 terminal device or equivalent. The grounded conductor (neutral) supplied to all AC equipment on the antenna structure should be disconnected before taking measurements.

E) Actual site conditions may require longer ground rods, additional ground rods and/or land fill additives to reduce soil resistivity levels.

F) Avoid sharp bends when routing grounding wire. Grounding wires to antenna structure to be run as short and straight as possible.

G) Final grade directly above grounding electrode system to be water permeable.

8.0 POWER/IFL CONDUIT NOTES:

A) Electrical power – Drawing depicts suggested location for electrical power conduit to antenna. Size, type and depth to bury conduit to be determined by customer in compliance with local codes. Direction to route conduit to be determined by the relative location of communications building/shelter. Power conduit to extend 6" (152 mm) (minimum) above surface of foundation slag. Open ends of conduit to be sealed to prevent moisture and foreign particle contamination. Customer to provide main load center assembly and over-current protection devices for electrical equipment. Mounting location of load center to be determined by customer in accordance with local codes.

B) For routing IFL cables, 4" (102 mm) size conduit recommended. Type and depth to bury conduit to be determined by customer, in compliance with local codes. Location of conduit on foundation and direction to route conduit to be determined by location of communications building/shelter. Conduit to extend 36" (1 m) (minimum) above surface of foundation slab. All bends to be large radius, maximum of two bends per fun. Open ends of conduit to be sealed to prevent moisture and/or foreign particle contamination.

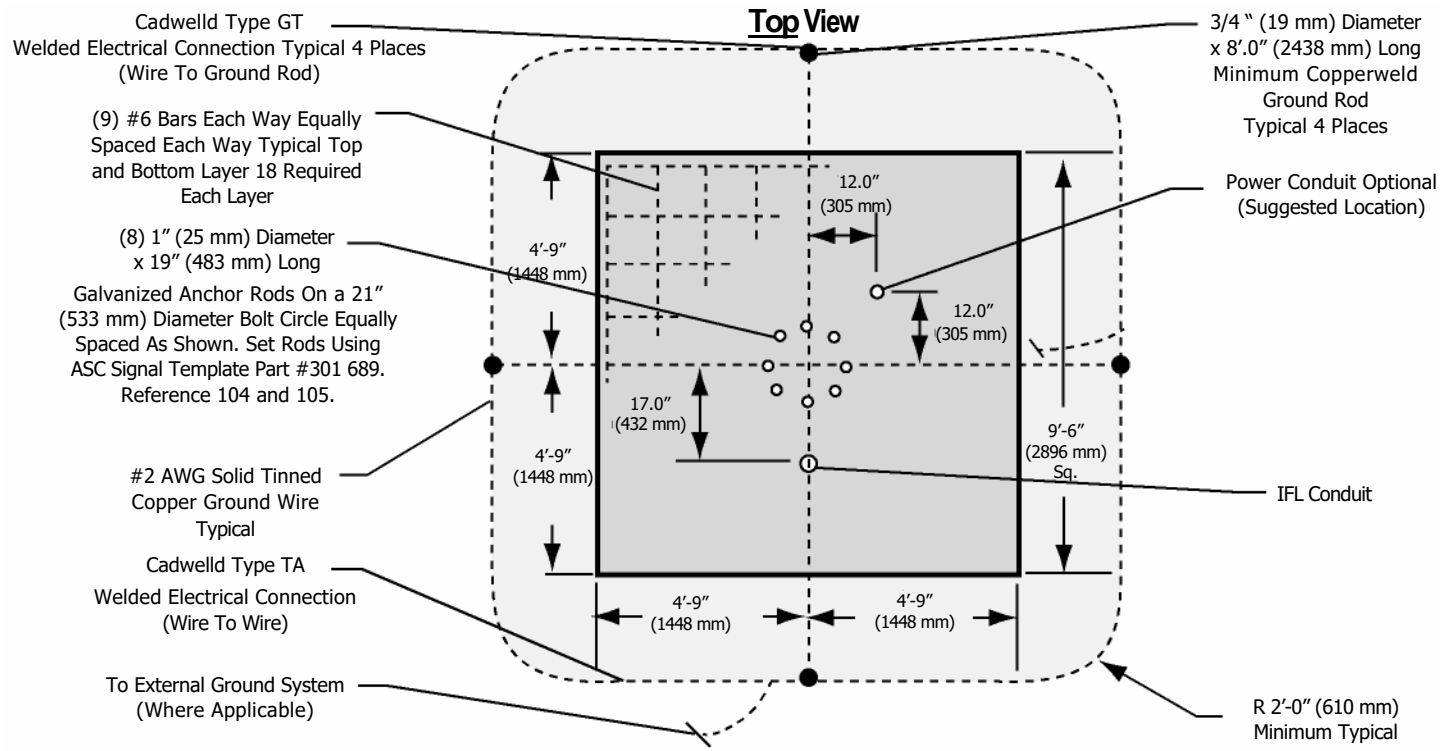

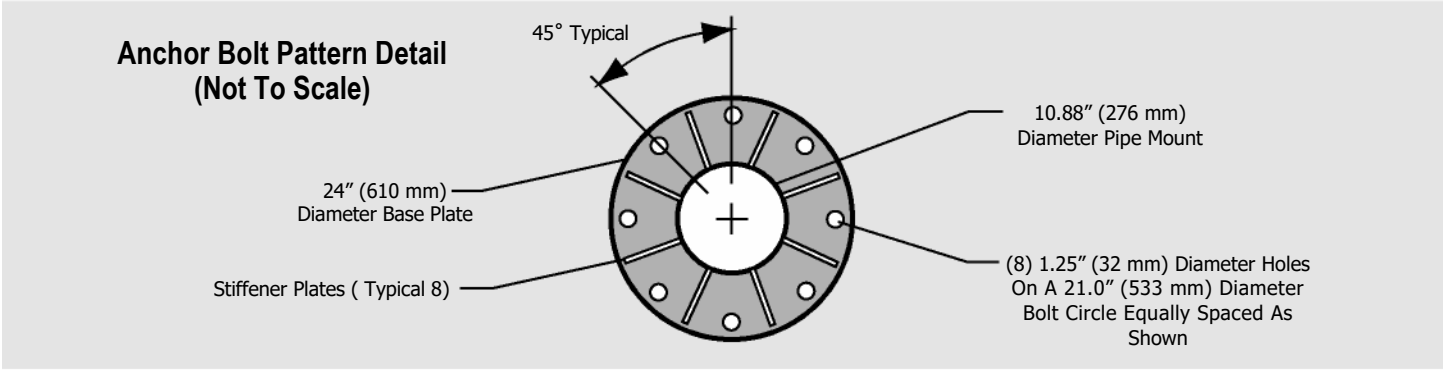

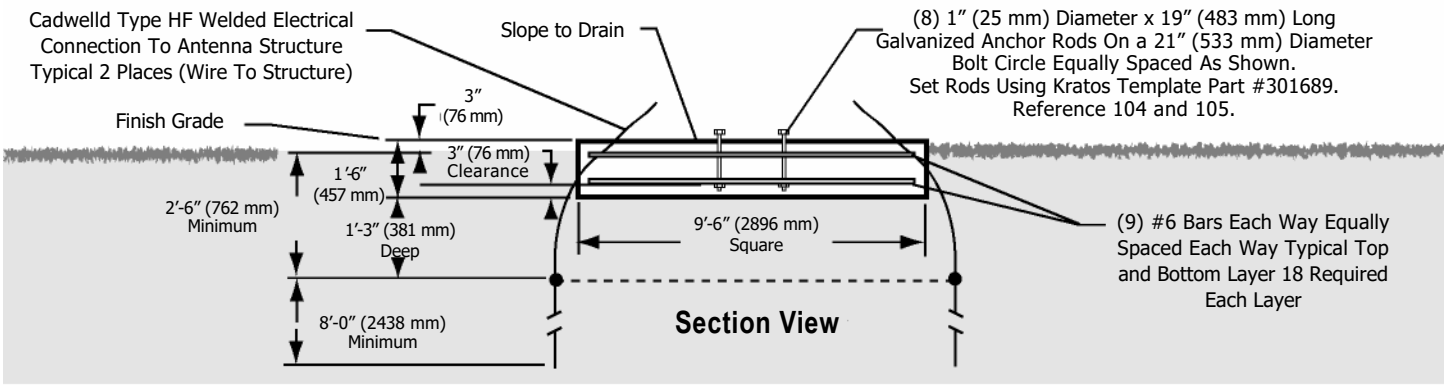

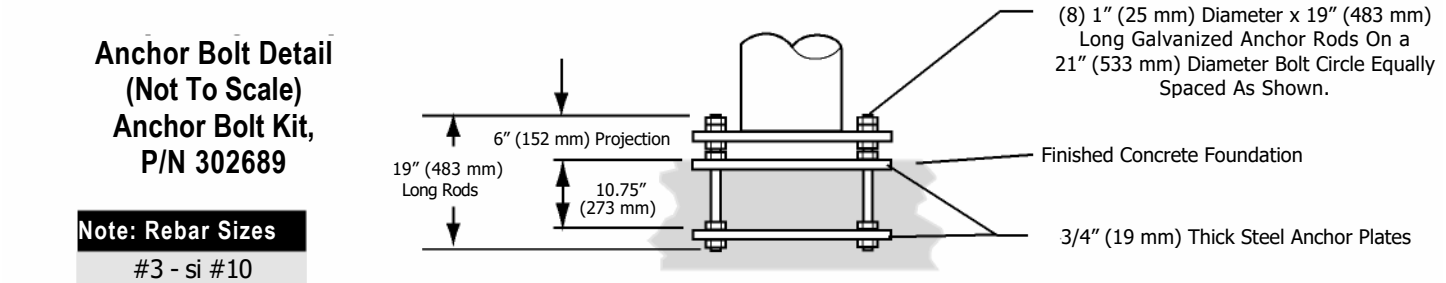

Note: Rebar Sizes
#3 - si #10
#5 - si #16
#6 - si #19

Figure 2: Grounding Details for Pad Foundation
(Similar for Pier and Pipe Foundation Options)

Simplified Engineering Drawing

DESCRIPTION	QTY.		SIZE	LENGTH
TOP LAYER REBAR - W	9		#5	9′-0″ (2743 mm)
TOP LAYER REBAR - L	9		#5	9′-0″ (2743 mm)
BOT. LAYRER REBAR - W	9		#5	9′-0″ (2743 mm)
BOT. LAYER REBAR - L	9		#5	9′-0″ (2743 mm)
APPROXIMATE CONCRETE VOLUME: 5.0± CUBIC YARDS (3.82 M^3)				

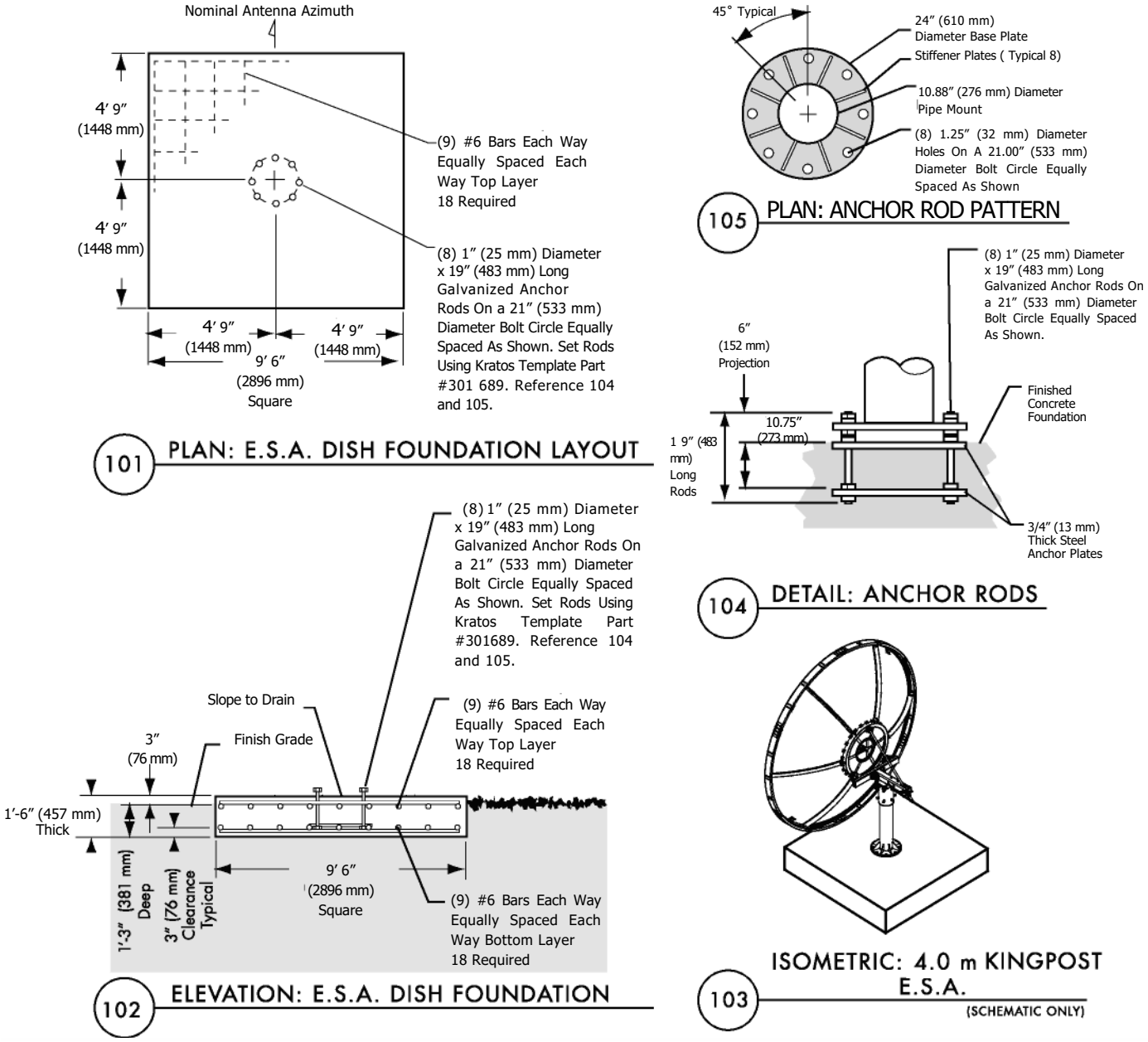

Note: Rebar Sizes
#3 - si #10
#5 - si #16
#6 - si #19

Figure 3: ESA Pad Foundation

Simplified Engineering Drawing

BILL OF MATERIAL			
DESCRIPTION	QTY	SIZE	LENGTH
VERTICAL REBAR	12	#6	9′-9″ (2972 mm)
PIER TIES	17	#3	9′-2.25″ (2800 mm)
APPROX. CONCRETE VOLUME:	5.0± CUBIC YARDS (2.06 M³)		

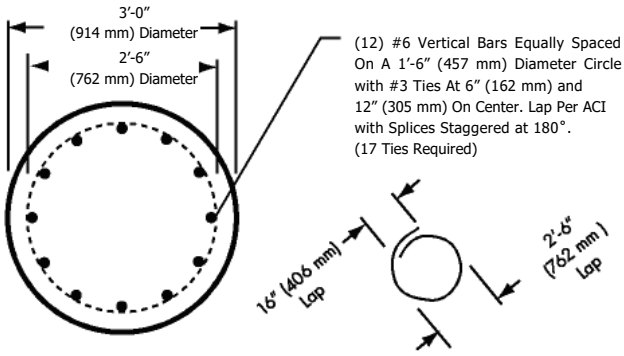

102 PLAN: E.S.A. DISH FOUNDATION

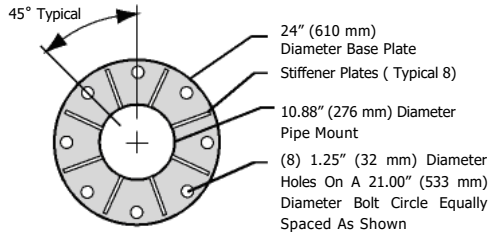

105 PLAN: ANCHOR ROD PATTERN

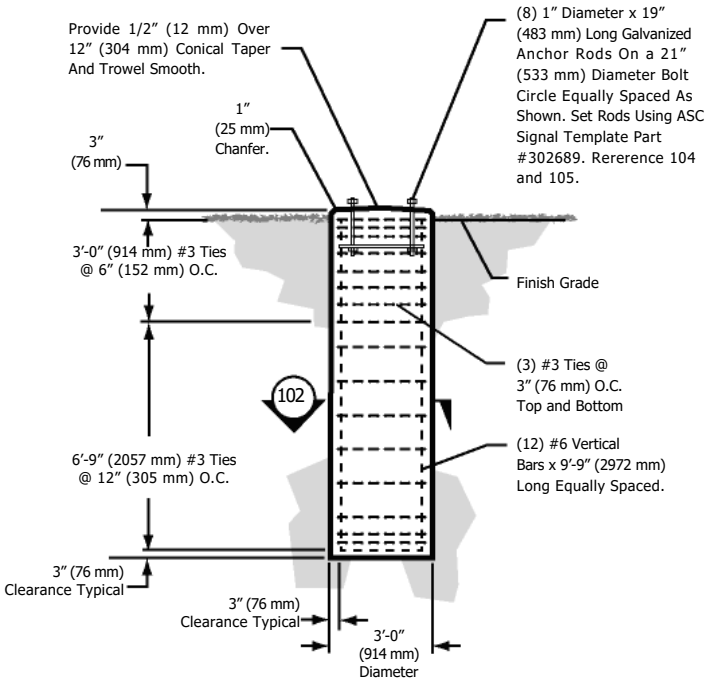

101 ELEVATION: E.S.A. DISH FOUNDATION

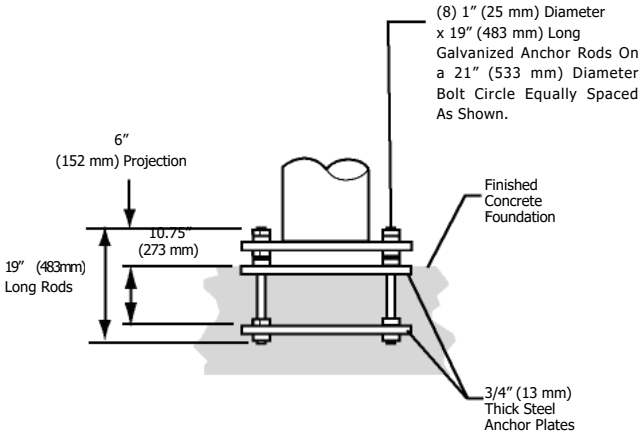

104 DETAIL: ANCHOR RODS

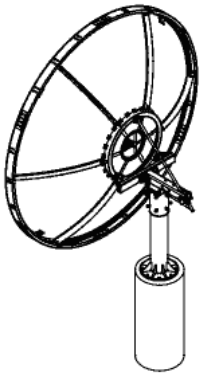

103 ISOMETRIC: 4.0 m KINGPOST E.S.A.
(SCHEMATIC ONLY)

Note: Rebar Sizes
#3 - si #10
#5 - si #16
#6 - si #19

Figure 4: ESA Pier Foundation

Simplified Engineering Drawing

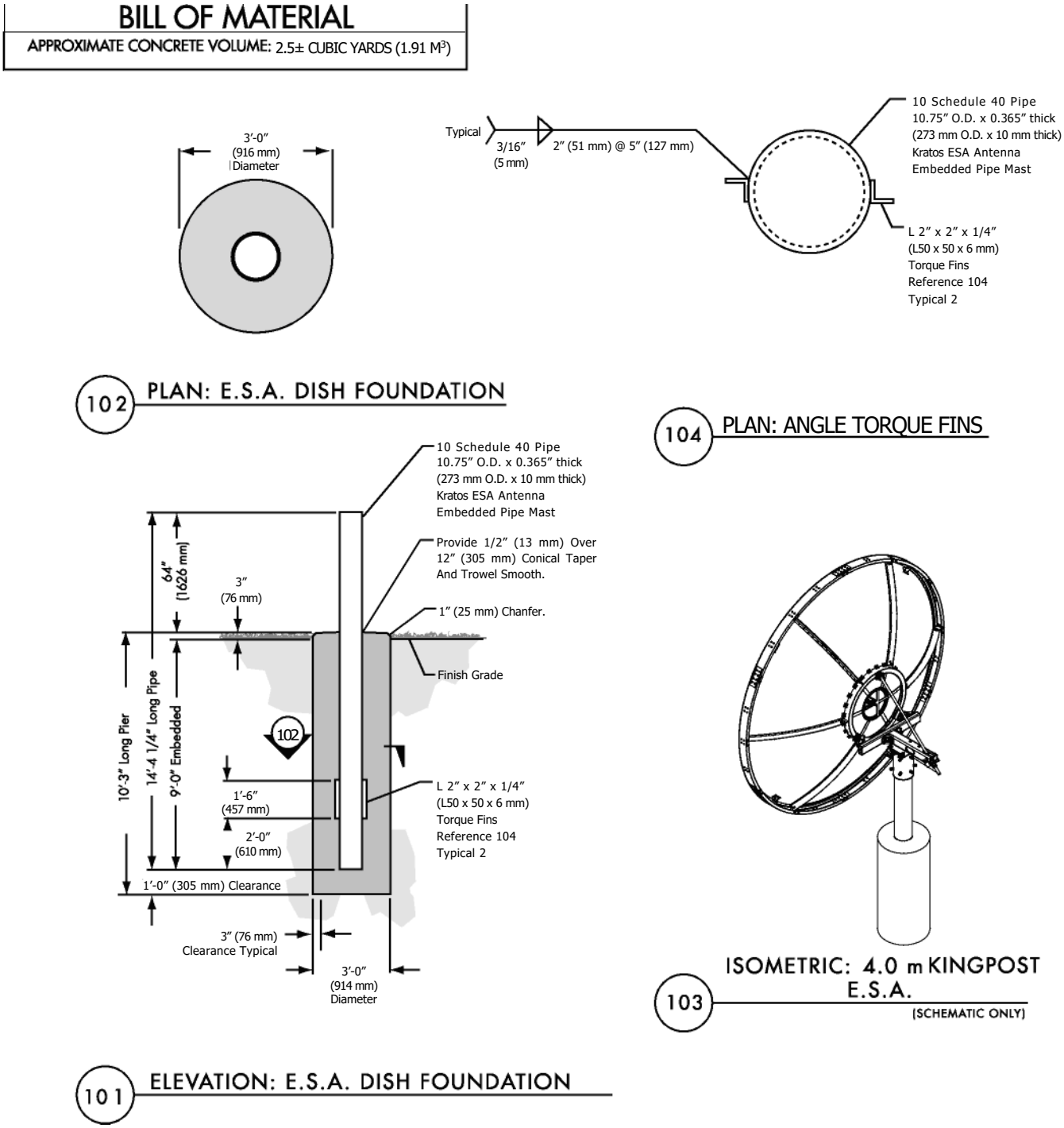

Figure 5: Embedded Pipe Foundation

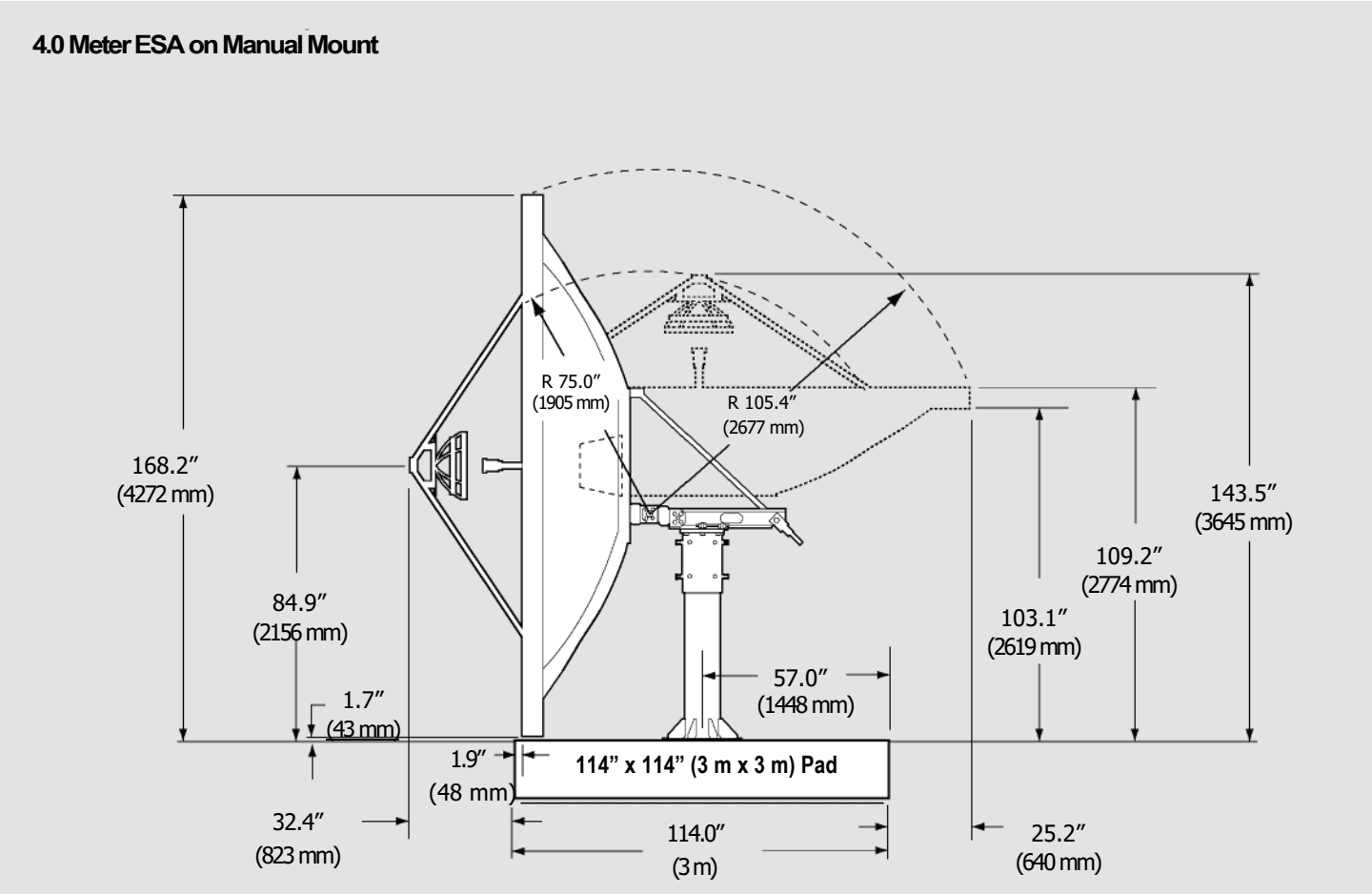

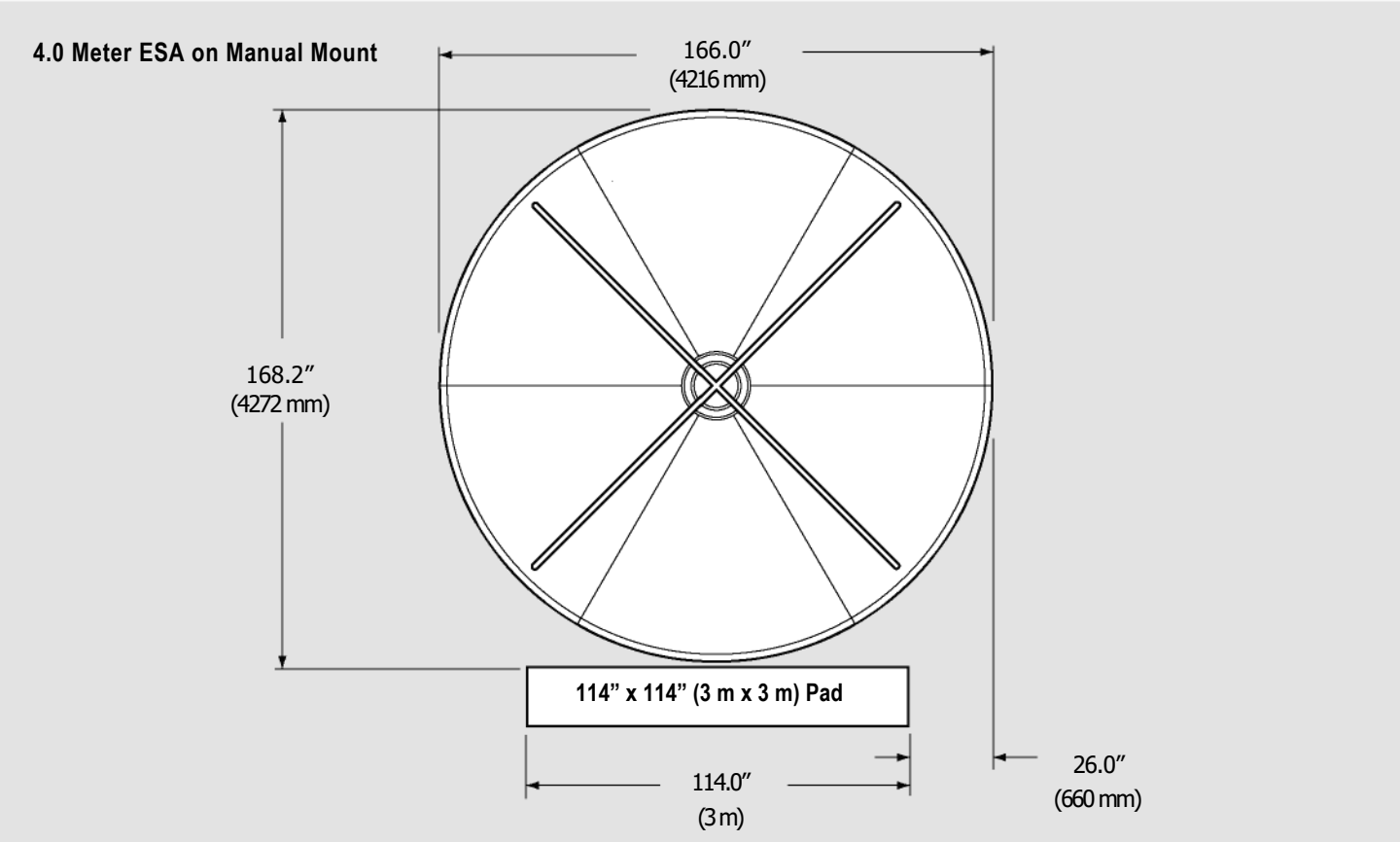

Figure 6: Pad Foundation

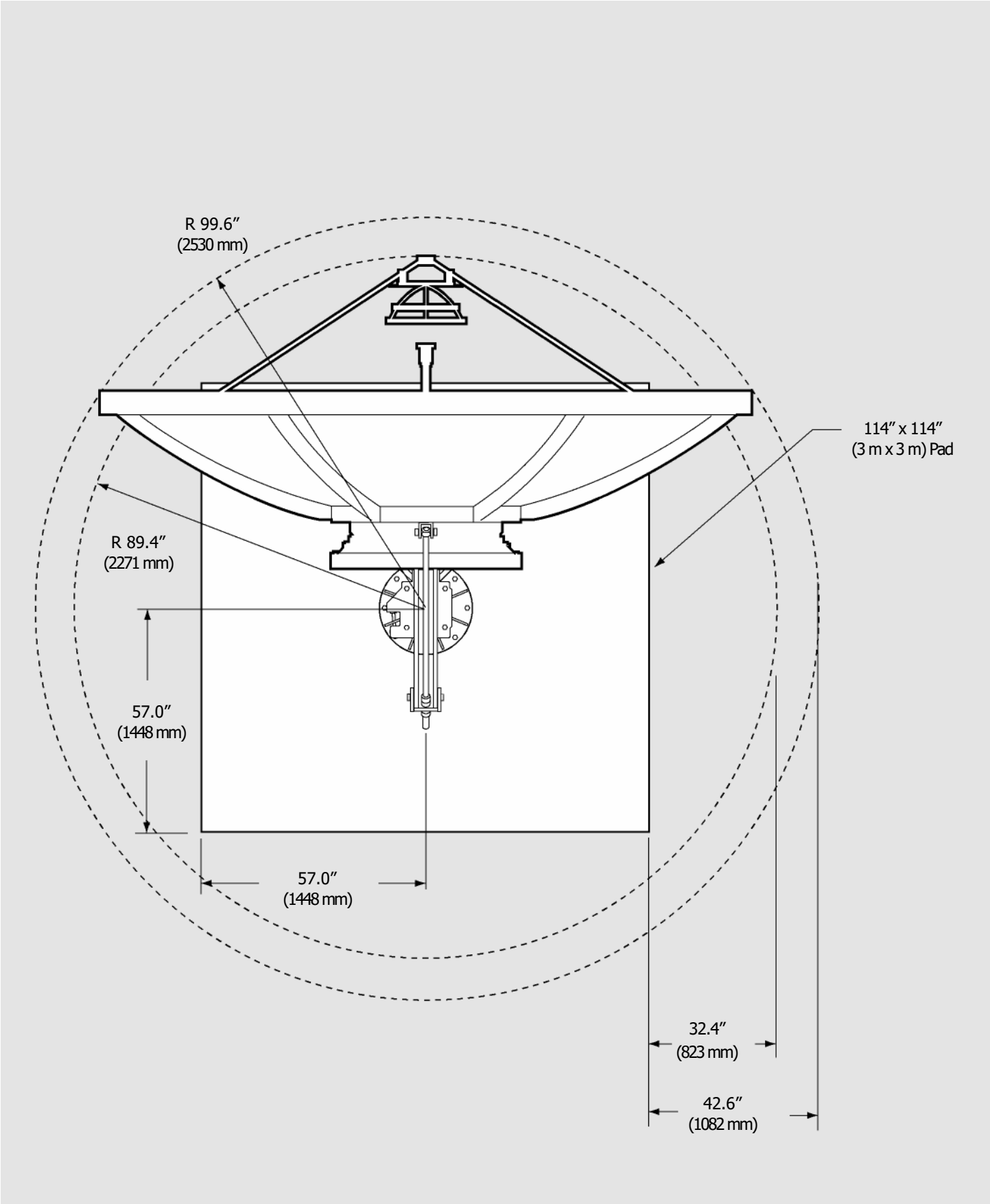

Figure 7: Pad Foundation

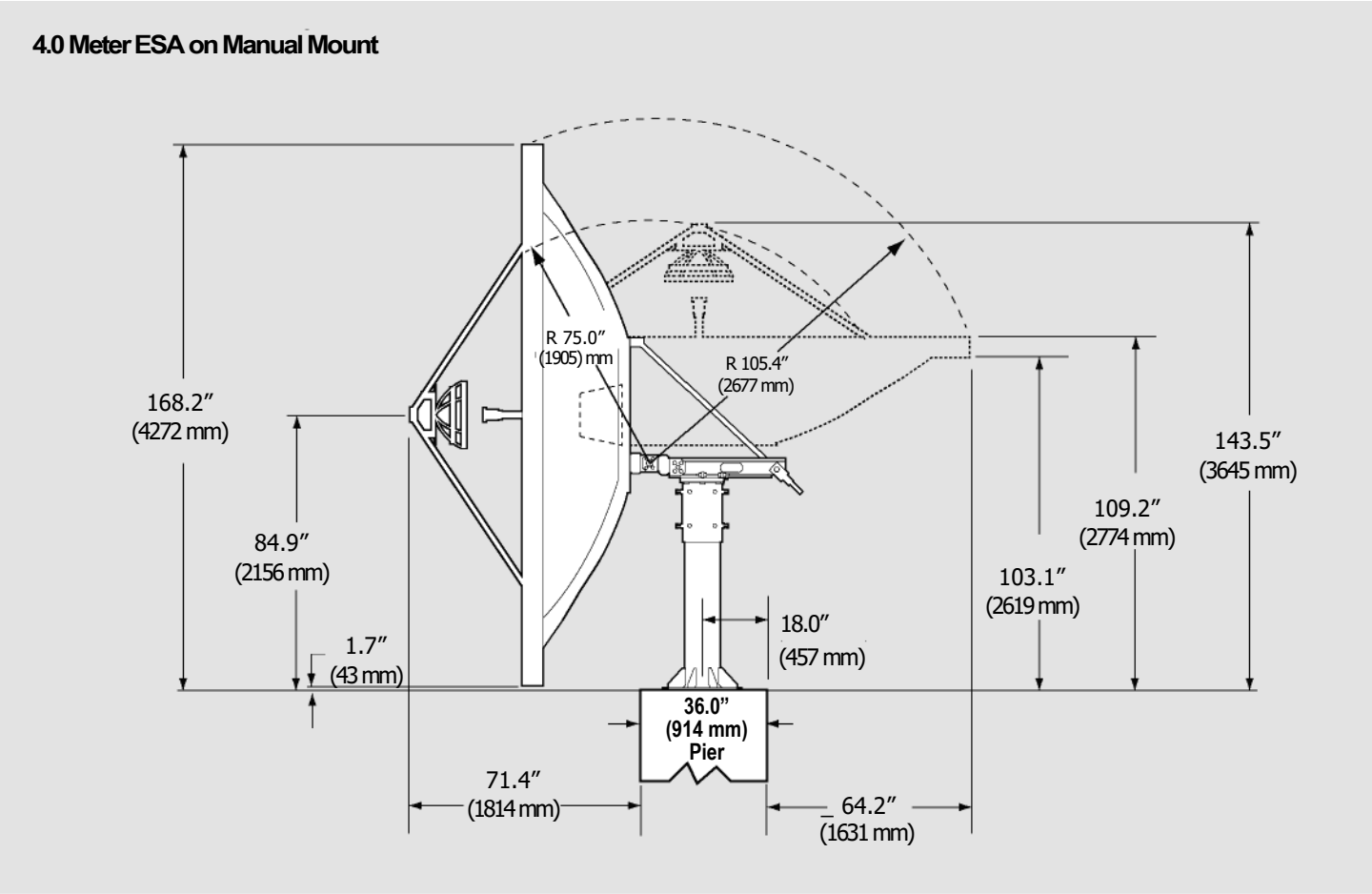

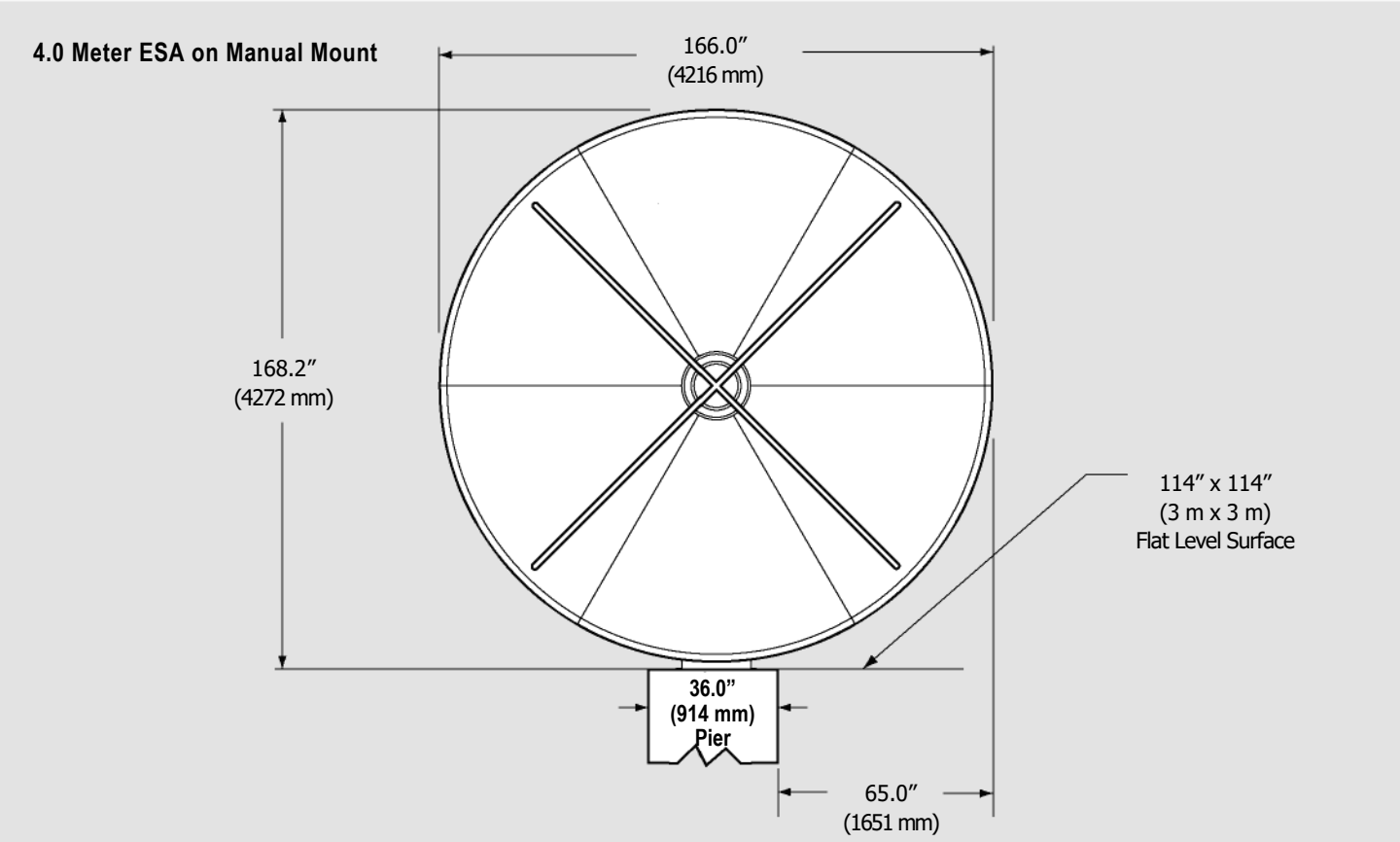

Figure 8: Pier Foundation

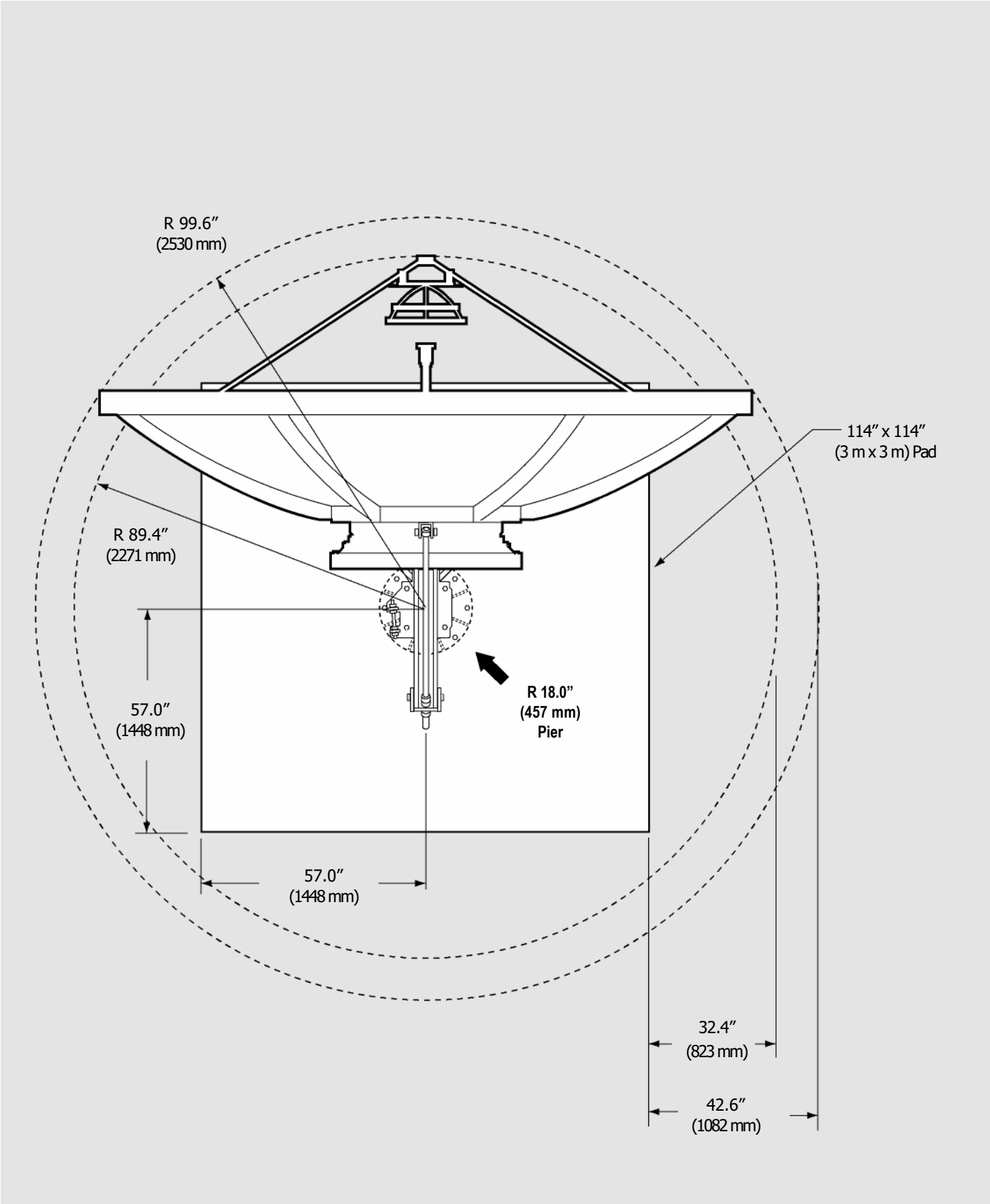

Figure 9: Pier Foundation

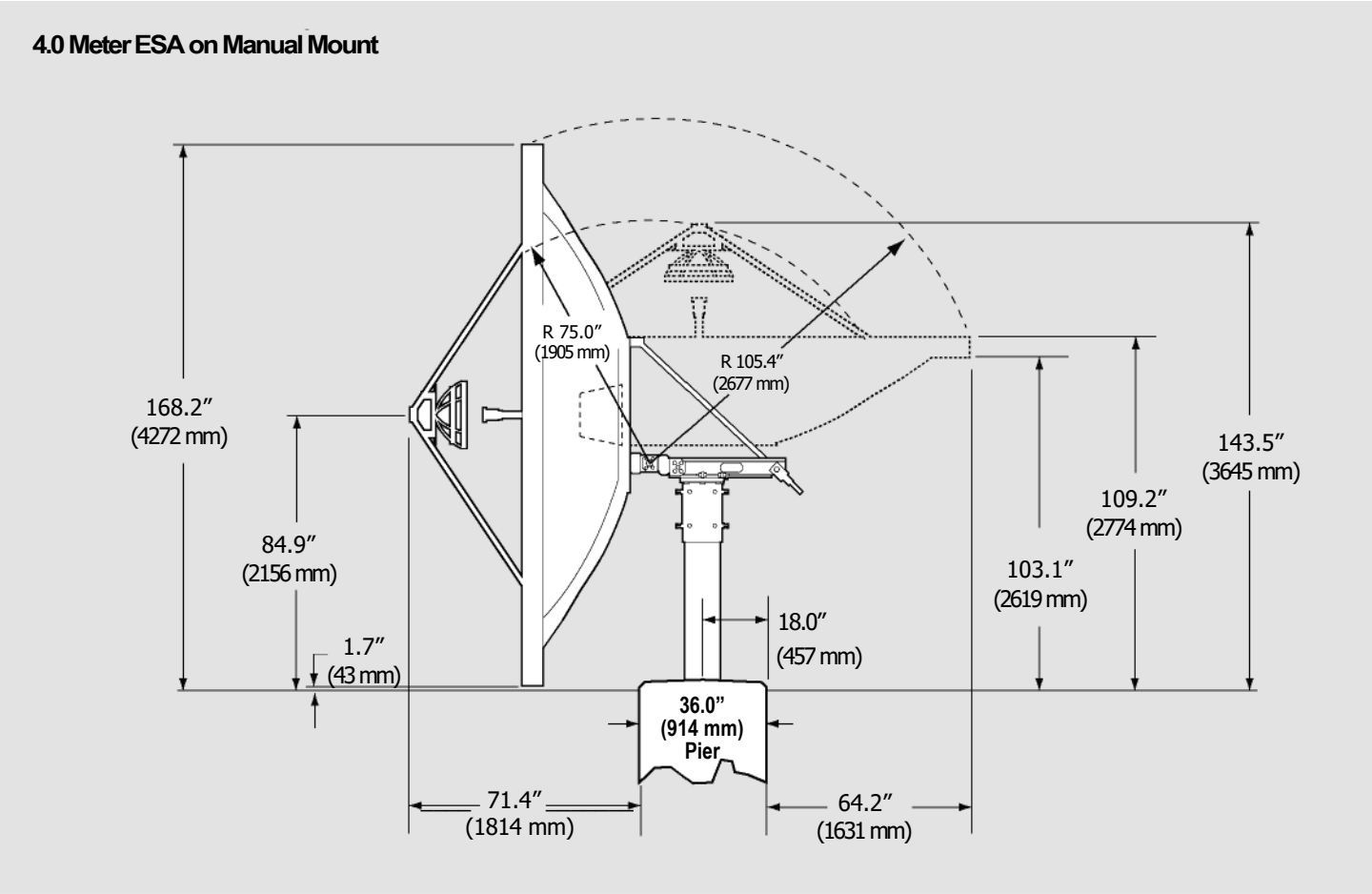

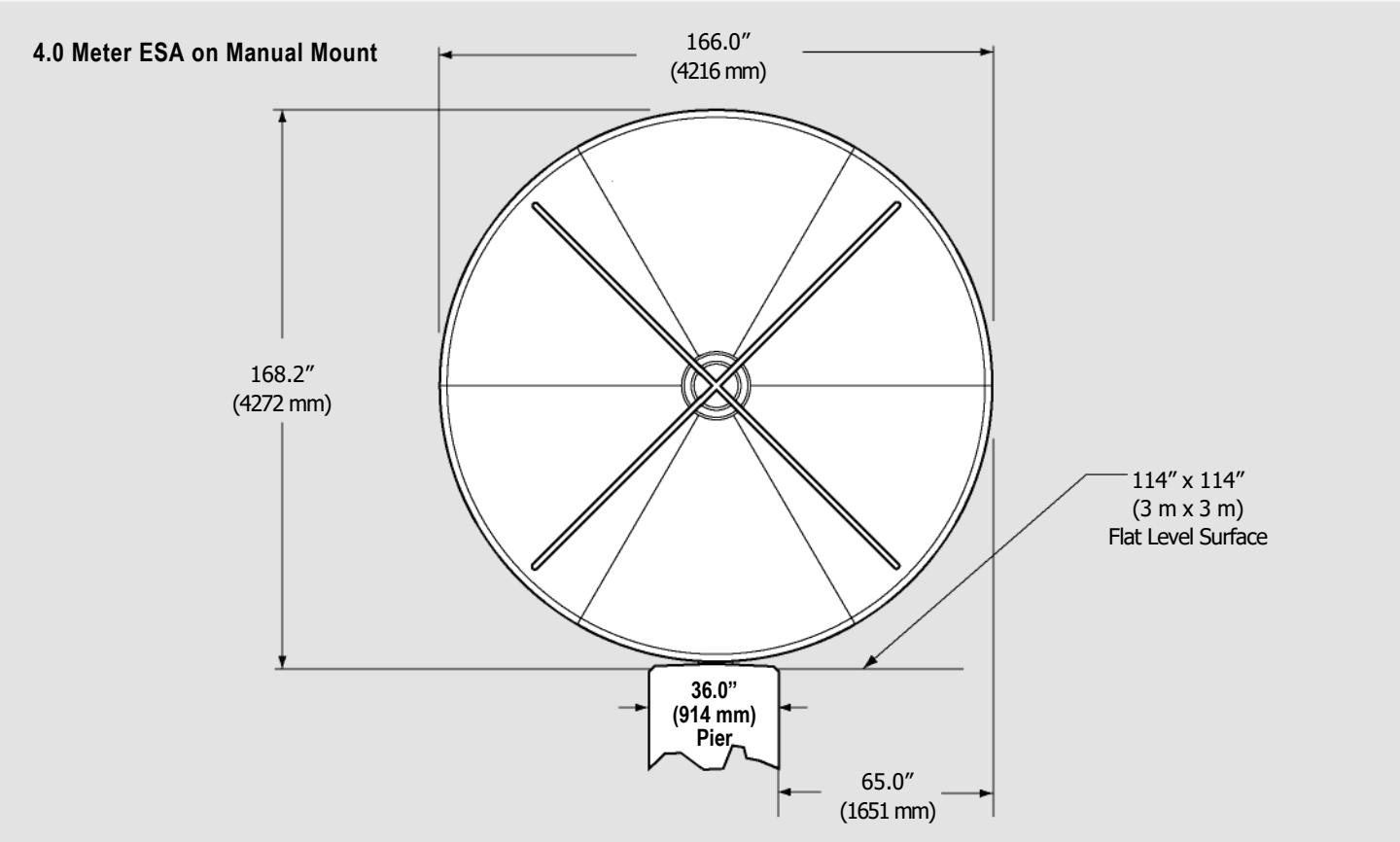

Figure 10: Embedded Pipe Foundation

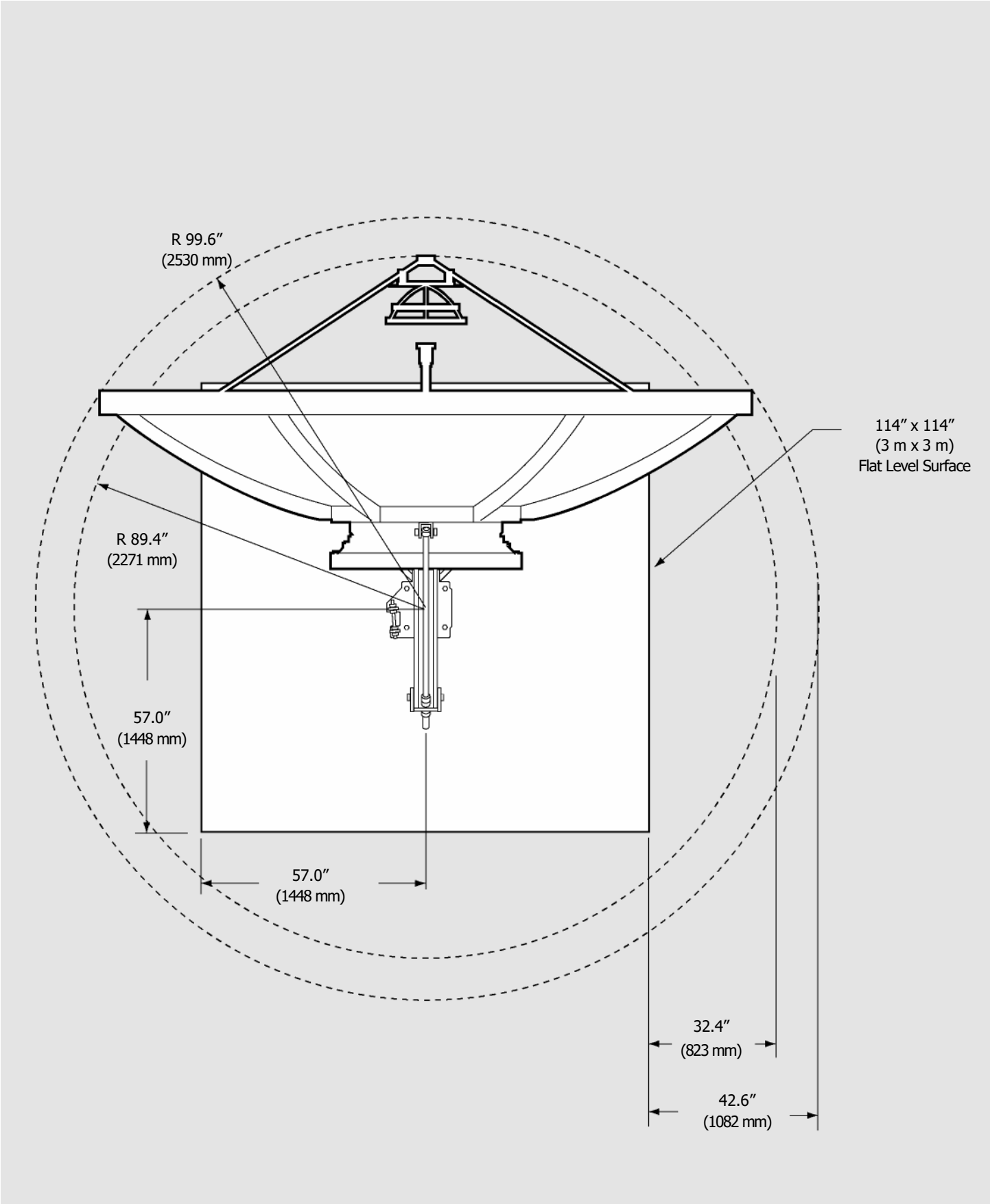

Figure 11: Embedded Pipe Foundation

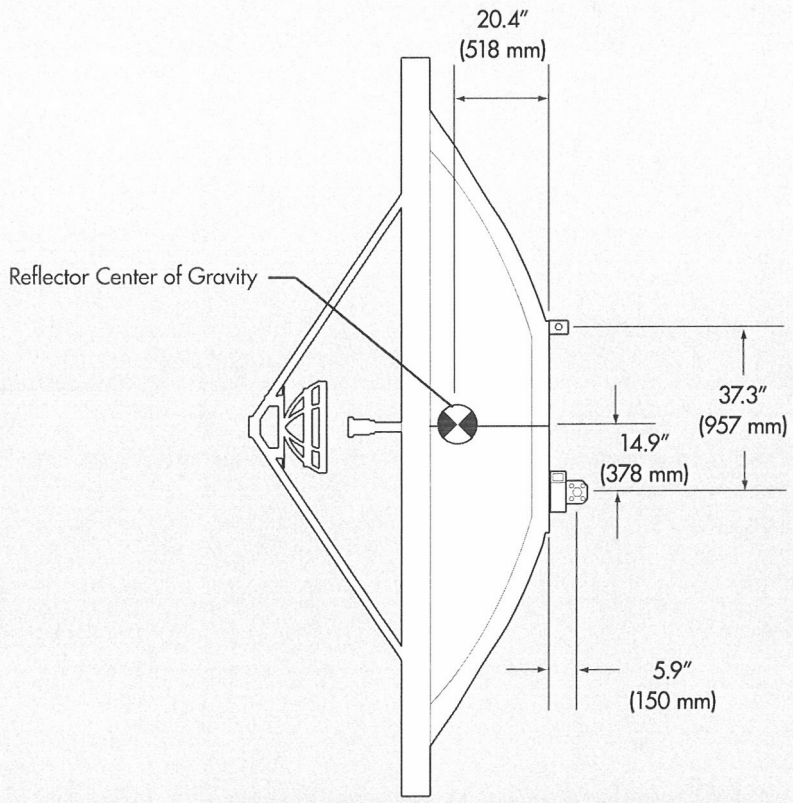

Reflector Weight: 600 lb (272.2 kg)

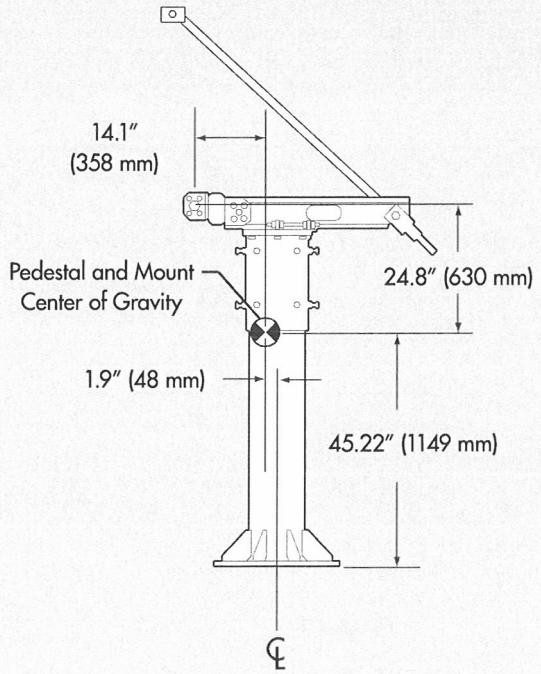

Pedestal and Mount Weight: 680 lb (308.4 kg)

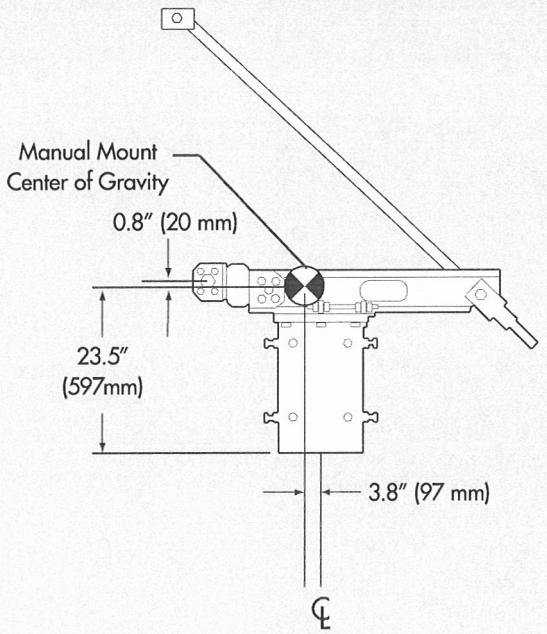

Manual Mount Weight: 340 lb (154.2 kg)

Figure 12