Foundation Specifications

for 6.5-Meter Modular Earth Station Antennas

Introduction

This document specifies typical foundation characteristics, designs, requirements, and dimensional specifications for the Kratos 6.5-Meter Modular Earth Station Antenna.

Foundation Loading Characteristics

Foundation loads are applied to the foundation pads as shown in Figure 1. Positive applied forces are in the direction of the X, Y and Z coordinate axes. Varying load conditions are dependent upon incident angle of the wind and elevation/azimuth angles of the antenna.

Foundation loading forces for various elevation/azimuth vs. wind conditions are listed in Table 1.
The selected foundation for a particular site is dependent upon local conditions. Soil borings and foundation analysis should be performed by a qualified civil engineer.

Typical slab and pier type foundation designs are shown in Figures 3 and 4. Copies of these designs on D-size (22" x 33") sheet are available from Kratos on request. Refer to drawing numbers 300085 (slab type) and 300086 (pier type).

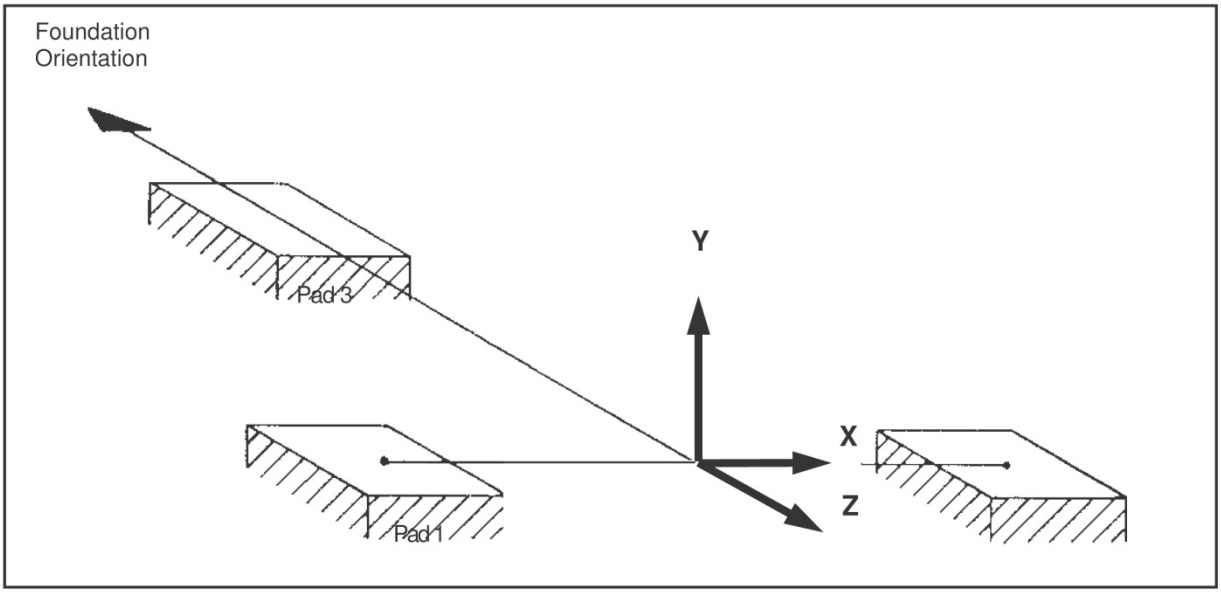

Figure 1

Copyright 2021 Kratos Defense & Security Solutions, Inc.

Anchor Bolt Requirements

A typical anchor bolt installation configuration and corresponding dimensions are shown in Figure 2.

Kratos Type 201630 Anchor Bolt Kit includes anchor bolts, shear caps, anchor plates and require mounting hardware as shown.

Foundation Orientation

Proper foundation orientation is required to obtain the desired orbital arc coverage from a particular site location. The required azimuth and elevation angles of the antenna, relative to the mount, must be determined to establish the appropriate foundation orientation. A specific foundation orientation requirement may be requested with the antenna as part of the installation package.

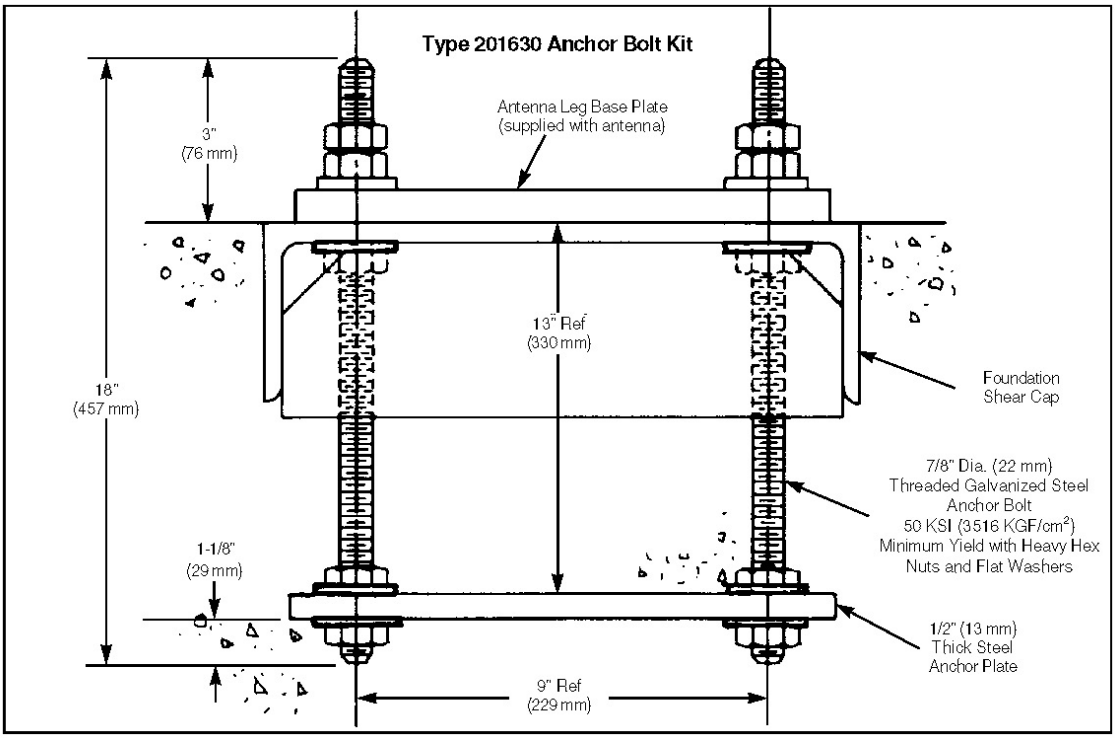

Figure 2

EL = 0°

FOUNDATION LOADING FORCES (1000 lbs)

Wind Speed (mph)	Wind Angle (α)	FDN Pad No.	AZ = 0° X	AZ = 0° Y	AZ = 0° Z	AZ = -60° X	AZ = -60° Y	AZ = -60° Z	AZ = +60° X	AZ = +60° Y	AZ = +60° Z	AZ = +90° X	AZ = +90° Y	AZ = +90° Z
125	60°	1	-8.3	-20.0	-16.2	-16.7	-40.6	-30.2	8.4	20.2	11.9	14.4	34.5	20.7
		2	10.6	-25.0	-13.2	-5.9	14.7	14.8	16.9	-40.5	-23.8	13.5	-32.5	-19.5
		3	0.2	20.5	-7.7	0.6	14.3	-5.3	-0.2	10.4	-3.7	-0.4	1.2	-0.9
125	-60°	1	-10.6	-24.9	-13.8	-16.9	-40.4	-24.6	-17.2	-42.9	-39.7	12.7	31.2	25.7
		2	8.3	-19.8	-16.7	-8.4	20.0	11.1	-7.2	18.6	26.9	14.5	-35.6	-26.9
		3	-0.1	19.0	-7.3	1.1	12.3	-5.2	2.1	5.0	-0.5	-0.2	3.0	-0.9
125	135°	1	7.7	19.0	21.3	8.0	20.0	21.6	-0.9	-1.8	6.4	-5.5	-12.6	1.1
		2	-2.0	3.7	-7.1	7.1	-18.1	-22.4	-9.4	21.5	5.0	-9.9	22.7	8.3
		3	-1.1	-13.3	4.8	0.5	-2.2	-1.0	-1.0	-8.5	2.3	0.7	-10.6	5.2
125	-135°	1	1.9	3.1	-5.6	9.4	21.2	7.1	-6.8	-17.7	-19.9	-9.0	-23.1	-25.5
		2	-7.7	18.7	22.8	0.6	-1.2	8.9	-8.0	19.8	23.8	-4.5	11.7	15.9
		3	1.0	-9.0	3.7	-1.5	-13.6	6.4	1.9	-7.0	3.8	-0.3	6.7	-3.6

EL = 30°

FOUNDATION LOADING FORCES (1000 lbs)

Wind Speed (mph)	Wind Angle (α)	FDN Pad No.	AZ = 0° X	AZ = 0° Y	AZ = 0° Z	AZ = -60° X	AZ = -60° Y	AZ = -60° Z	AZ = +60° X	AZ = +60° Y	AZ = +60° Z	AZ = +90° X	AZ = +90° Y	AZ = +90° Z
125	60°	1	-7.0	-16.8	-13.0	-12.7	-30.9	-23.7	7.9	17.0	11.0	11.4	27.3	17.0
		2	7.8	-18.3	-8.6	-5.7	14.0	14.5	13.0	-29.4	-18.5	10.6	-25.6	-16.0
		3	0.4	17.0	-6.6	0.2	8.8	-3.0	2.1	5.2	-2.0	-0.5	1.8	-1.3
125	-60°	1	-7.9	-18.5	-8.8	-12.9	-31.0	-19.2	6.8	13.9	14.8	10.9	26.8	23.0
		2	7.0	-16.8	-13.2	-6.4	15.4	9.0	14.1	-31.3	-25.9	10.5	-26.1	-20.5
		3	-0.3	18.4	-7.5	1.0	9.4	-4.0	3.4	11.8	-5.3	0.2	-2.9	2.1
125	135°	1	9.8	23.6	22.2	10.9	26.4	23.0	-0.6	-1.5	5.0	-6.2	-14.6	-2.3
		2	-3.0	6.1	-2.0	8.5	-21.1	-21.0	-12.1	28.1	12.3	-12.7	29.5	15.2
		3	-1.6	-17.6	6.4	0.2	-4.3	1.0	-0.2	-12.2	4.0	1.4	-17.7	8.8
125	-135°	1	3.1	6.1	-1.6	12.1	28.1	13.6	-9.8	-21.0	-21.0	-11.1	-27.8	-25.1
		2	-10.0	23.9	22.8	0.3	-0.9	6.8	-12.5	26.8	25.9	-6.5	16.3	15.7
		3	1.6	-21.0	8.4	-1.7	-18.0	8.0	-4.0	-8.6	4.3	-0.6	9.1	-5.0

EL = 60°

FOUNDATION LOADING FORCES (1000 lbs)

Wind Speed (mph)	Wind Angle (α)	FDN Pad No	AZ = 0° X	AZ = 0° Y	AZ = 0° Z	AZ = -60° X	AZ = -60° Y	AZ = -60° Z	AZ = +60° X	AZ = +60° Y	AZ = +60° Z	AZ = +90° X	AZ = +90° Y	AZ = +90° Z
125	±60°	1	-2.8	-6.8	-4.3	-5.6	-13.9	-9.8	3.6	8.6	7.0	6.2	14.9	11.4
		2	2.8	-6.7	-4.3	-3.6	8.7	7.2	5.7	-13.8	-9.9	4.6	-11.5	-8.4
		3	0.0	5.0	-1.9	0.3	2.3	-0.8	-0.5	2.9	-1.2	-0.1	-2.4	1.0
125	±120°	1	6.9	15.9	11.2	11.6	27.5	18.4	-3.8	-9.7	-6.3	-7.9	-19.4	-12.6
		2	-6.9	16.0	11.2	3.8	-9.5	-6.2	-11.6	27.5	18.3	-9.7	23.2	15.5
		3	0.0	-15.3	5.8	-0.9	-12.1	4.9	0.7	-11.5	4.5	0.4	-4.9	2.1

EL = 90°

FOUNDATION LOADING FORCES (1000 lbs)

Wind Speed (mph)	Wind Angle (α)	FDN Pad No.	AZ = 0° X	AZ = 0° Y	AZ = 0° Z	AZ = -60° X	AZ = -60° Y	AZ = -60° Z	AZ = +60° X	AZ = +60° Y	AZ = +60° Z	AZ = +90° X	AZ = +90° Y	AZ = +90° Z
125	90°	1	-4.1	-9.9	-6.5	-7.8	-17.7	-12.2	3.0	7.2	5.5	5.8	13.9	10.0
		2	4.1	-9.8	-6.5	-3.6	7.4	6.2	7.3	-17.6	-11.8	6.0	-14.8	-10.0
		3	0.0	7.8	-2.9	-1.4	3.9	-1.4	-0.5	5.3	-2.1	-0.2	0.4	-0.2

Table 1

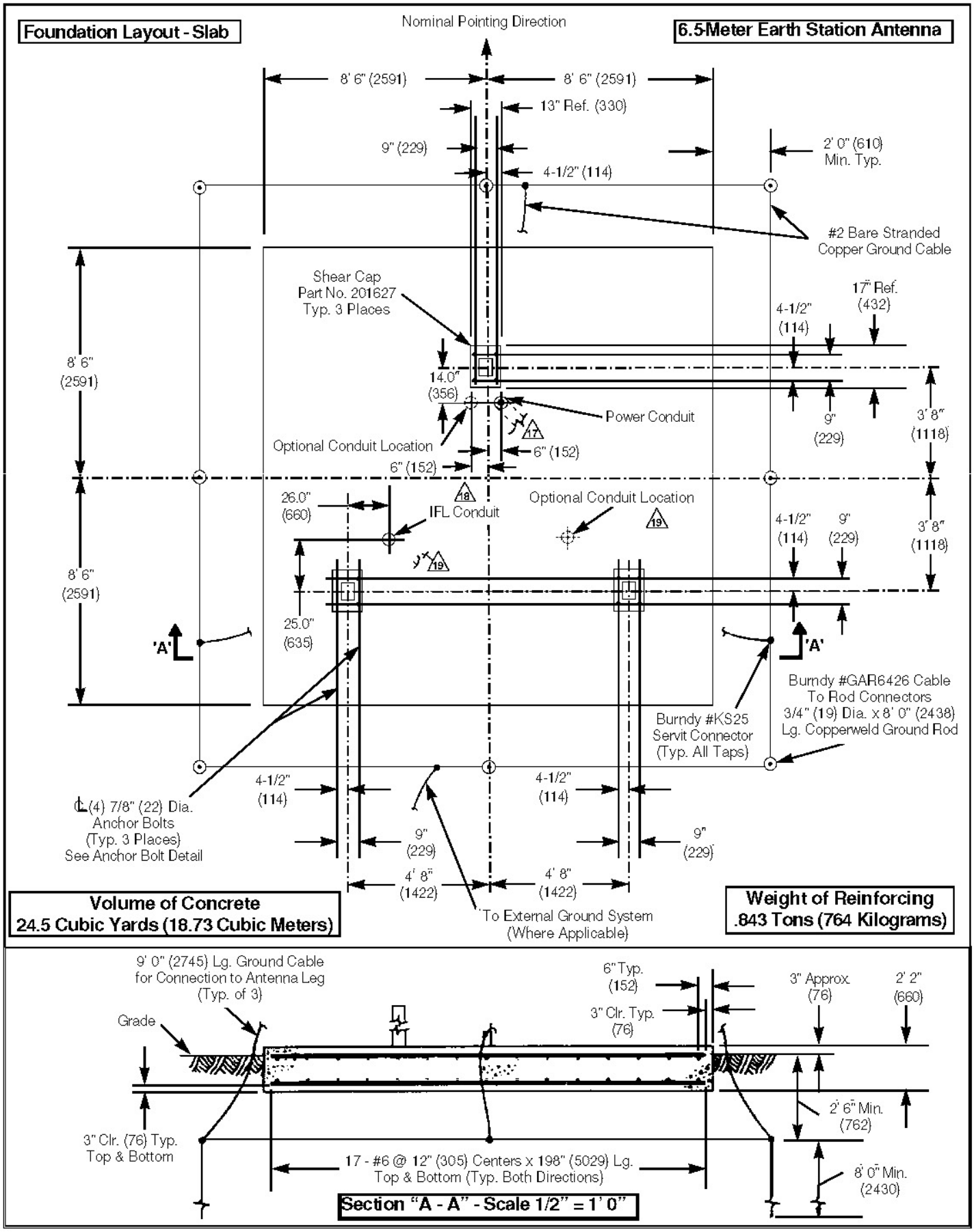
Foundation Layout - Slab
Nominal Pointing Direction
6.5-Meter Earth Station Antenna
8' 6" (2591)
8' 6" (2591)
13" Ref. (330)
9" (229)
4-1/2" (114)
2' 0" (610) Min. Typ.
#2 Bare Stranded Copper Ground Cable
Shear Cap Part No. 201627 Typ. 3 Places
17" Ref. (432)
4-1/2" (114)
8' 6" (2591)
14.0" (356)
Power Conduit
9" (229)
3' 8" (1118)
Optional Conduit Location
6" (152)
6" (152)
26.0" (660)
IFL Conduit
Optional Conduit Location
4-1/2" (114)
9" (229)
3' 8" (1118)
8' 6" (2591)
25.0" (635)
'A'
'A'
Burndy #GAR6426 Cable To Rod Connectors 3/4" (19) Dia. x 8' 0" (2438) Lg. Copperweld Ground Rod
Burndy #KS25 Servit Connector (Typ. All Taps)
4-1/2" (114)
4-1/2" (114)
(4) 7/8" (22) Dia. Anchor Bolts (Typ. 3 Places) See Anchor Bolt Detail
9" (229)
9" (229)
4' 8" (1422)
4' 8" (1422)
To External Ground System (Where Applicable)
Volume of Concrete 24.5 Cubic Yards (18.73 Cubic Meters)
Weight of Reinforcing .843 Tons (764 Kilograms)
9' 0" (2745) Lg. Ground Cable for Connection to Antenna Leg (Typ. of 3)
Grade
6" Typ. (152)
3" Clr. Typ. (76)
3" Approx. (76)
2' 2" (660)
2' 6" Min. (762)
3" Clr. (76) Typ. Top & Bottom
17 - #6 @ 12" (305) Centers x 198" (5029) Lg. Top & Bottom (Typ. Both Directions)
8' 0" Min. (2430)
Section "A - A" - Scale 1/2" = 1' 0"

Figure 3

General Notes (Figure 3)

1 This foundation is a typical design only. Certification of its suitability for a particular installation by a professional engineer is required prior to its use for actual fabrication.

2 All dimensions are shown in feet and inches (and millimeters).

3 Contractor shall field verify all dimensions locating existing construction before fabrication of new construction begins.

4 Concrete and related work shall be mixed, placed and cured in accordance with the "Building Code Requirements for Reinforced Concrete" ACI 318-89 (Rev 88) and "Specifications for Structural Concrete" ACI 301-84 (Rev 88) publication SP-15 (88).

5 Concrete shall develop a compressive strength of at least 3000 psi (211 kgf/cm^2) in 28 days with a maximum slump of 3" (76mm) at time of placing.

6 Reinforcing bars shall conform to ASTM A615 (S1) grade 60 deformed type Fy = 60,000 psi (4,220 kgf/cm^2).

7 Unless otherwise noted, concrete cover for reinforcing bars shall conform to the minimum requirements of ACI 318-89 (Rev 88).

8 Fabrication of reinforcing steel shall be in accordance with the "Manual of Standard Practice for Detailing Reinforced Concrete Structures" ACI 315-80 (Rev 86).

9 Provide 3/4" (19 mm) x 45°chamfer on all exposed concrete edges.

10 Foundations have been designed to rest on undisturbed soil (per EIA-41 1-A and RS-222-D) with a minimum allowable net vertical bearing capacity of 2000 psf (9770 kgf/m^2). If undesirable soil conditions are encountered, the engineer shall be notified.

11 Backfills shall be suitable excavated material or other suitable material compacted in 3" (76 mm) lifts to 90% of maximum density as determined by ASTM D1557.

12 Ground rods shall be driven to depths as shown (below permanent moisture level) and ground system resistance measured. The antenna structure shall be connected to a grounding system consisting of a number of interconnected ground rods. The system shall meet the standards of the Underwriters' Laboratories Publication No. UL96A for lightning protection. The ground rod system-to-earth resistance shall not exceed 1.0 ohm at any time during the year.

13 Grounding system shown is the minimum necessary. Local conditions will dictate grounding system design.

14 If this foundation is to be located in an area where the annual frost penetration depth exceeds 9" (229 mm), the local building code specifying a minimum required foundation depth should be consulted.

15 A tolerance of ±1/8" (3 mm) applies to all anchor bolt layout dimensions.

16 Level all shear caps individually and to within ±1/4" (6 mm) of each other.

17 For electrical power to antenna, 1-1/2" to 2-1/2" size conduit recommended. Type and depth to bury conduit to be determined by customer, in compliance with local codes. Direction to route conduit to be determined by location of communications building/shelter. Conduit to extend 6" (minimum) above surface of foundation slab. Open ends of conduit to be sealed to prevent moisture and foreign particle contamination.

18 IFL conduit required if no other means for routing cables are provided.

19 For routing IFL cables, 4" size conduit recommended. Type and depth to bury conduit to be determined by customer, in compliance with local codes. Location of conduit on foundation and direction to route conduit to be determined by location of communications building/shelter. Conduit to extend 36" (minimum) above surface of foundation slab. All bends to be large radius, maximum of two bends per run. Open ends of conduit to be sealed to prevent moisture and foreign particle contamination.

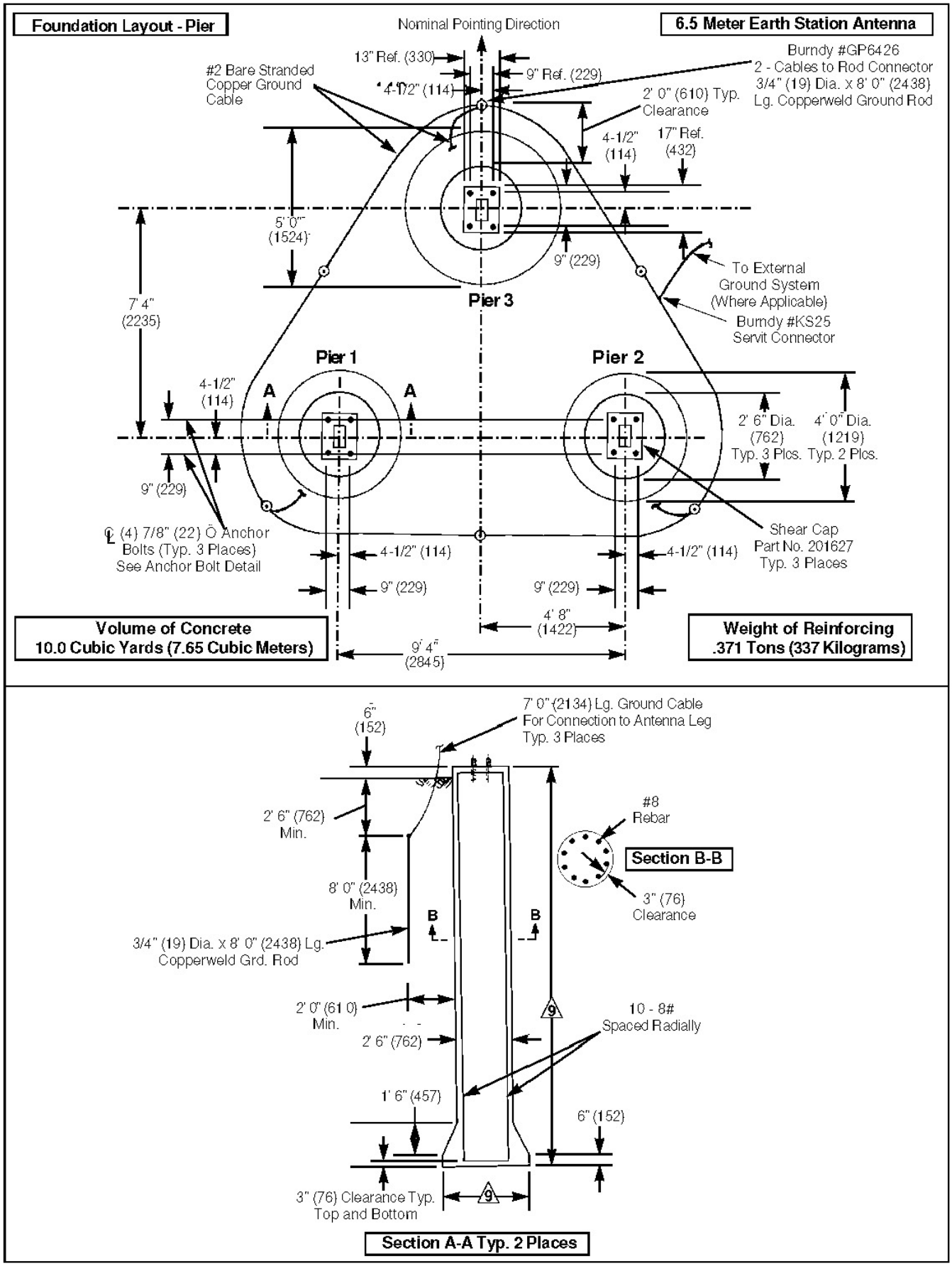
Foundation Layout - Pier
Nominal Pointing Direction
6.5 Meter Earth Station Antenna
13" Ref. (330)
9" Ref. (229)
4-1/2" (114)
#2 Bare Stranded Copper Ground Cable
Burndy #GP6426
2 - Cables to Rod Connector
3/4" (19) Dia. x 8' 0" (2438) Lg. Copperweld Ground Rod
2' 0" (610) Typ. Clearance
4-1/2" (114)
17" Ref. (432)
5' 0" (1524)
9" (229)
To External Ground System (Where Applicable)
Burndy #KS25 Servit Connector
7' 4" (2235)
Pier 3
Pier 1
Pier 2
4-1/2" (114)
A
A
2' 6" Dia. (762) Typ. 3 Plcs.
4' 0" Dia. (1219) Typ. 2 Plcs.
9" (229)
(4) 7/8" (22) Ö Anchor Bolts (Typ. 3 Places) See Anchor Bolt Detail
4-1/2" (114)
4-1/2" (114)
Shear Cap Part No. 201627 Typ. 3 Places
9" (229)
9" (229)
4' 8" (1422)
9' 4" (2845)
Volume of Concrete
10.0 Cubic Yards (7.65 Cubic Meters)
Weight of Reinforcing
.371 Tons (337 Kilograms)
6" (152)
7' 0" (2134) Lg. Ground Cable For Connection to Antenna Leg Typ. 3 Places
2' 6" (762) Min.
#8 Rebar
Section B-B
8' 0" (2438) Min.
3" (76) Clearance
B
B
3/4" (19) Dia. x 8' 0" (2438) Lg. Copperweld Grd. Rod
2' 0" (610) Min.
9
10 - 8# Spaced Radially
2' 6" (762)
1' 6" (457)
6" (152)
3" (76) Clearance Typ. Top and Bottom
9
Section A-A Typ. 2 Places

Figure 4

General Notes (Figure 4)

1 All dimensions are shown in feet and inches (and millimeters) and (reference).

2 Contractor shall field verify all dimensions locating existing construction before fabrication of new construction begins.

3 Concrete and related work shall be mixed, placed and cured in accordance with the "Building Code Requirements for Reinforced Concrete" ACI 318-89 (Rev 88) and "Specifications for Structural Concrete" ACI 301-84 (Rev 88) publication SP-15 (88).

4 Concrete for foundations shall develop a compressive strength of at least 3000 psi (211 kgf/cm^2) in 28 days with a maximum slump of 3" (76 mm) at time of placing.

5 Reinforcing bars shall conform to ASTM A615 (S1) grade 60 deformed type Fy = 60,000 psi (4,219 kgf/cm^2).

6 Unless otherwise noted, concrete cover for reinforcing bars shall conform to the minimum requirements of ACI 318-89 (Rev 88).

7 Fabrication of reinforcing steel shall be in accordance with the "Manual of Standard Practice for Detailing Reinforced Concrete Structures" ACI 315-80 (Rev 86).

8 Provide 3/4" x 45° (19mm x 45°) chamfer on all exposed concrete edges.

9 Piers are to be designed by a registered professional engineer for depth type and reinforcement for the following loads:

Pier 1	42.8K (Down)	-34.5K (Uplift)
Pier 2	40.5K (Down)	-26.9K (Uplift)
Pier 3	21.0K (Down)	-20.5K (Uplift)

10 The excavation and base flare are to be made with an auger and the piers are to be cast against undisturbed soil.

11 Forming is required for any above ground concreting.

12 Backfills shall be suitable excavated material or other suitable material compacted in 6" lifts to 90% of maximum density as determined by ASTM D1557.

13 Ground rods shall be driven to depths as shown (below permanent moisture level) and ground system resistance measured. The antenna structure shall be connected to a grounding system consisting of a number of interconnected ground rods. The system shall meet the standards of the Underwriters' Laboratories Publication No. UL96A for lightning protection. The ground rod system-to-earth resistance shall not exceed 1.0 ohm at any time during the year.

14 Grounding system shown is the minimum necessary. Local conditions will dictate grounding system design.

15 This foundation is a typical design only. Certification of its suitability for a particular installation by a professional engineer is required prior to its use for actual fabrication.

16 A tolerance of ±1/8" (3 mm) applies to all anchor bolt layout dimensions.

17 Level all shear caps individually and to within ±1/4" (6 mm) of each other.

18 This alternate foundation plan may be required in lieu of the footing foundation if space is limited or the soils are active and may heave or settle excessively.

Antenna Geometry for ES65-2

Basic dimensional characteristics and azimuth adjustment range capabilities are shown in Figure 5.

Figure 6 illustrates varying dimensions from ground reference of selected antenna points as the elevation angle fluctuates from 0° to 90°.

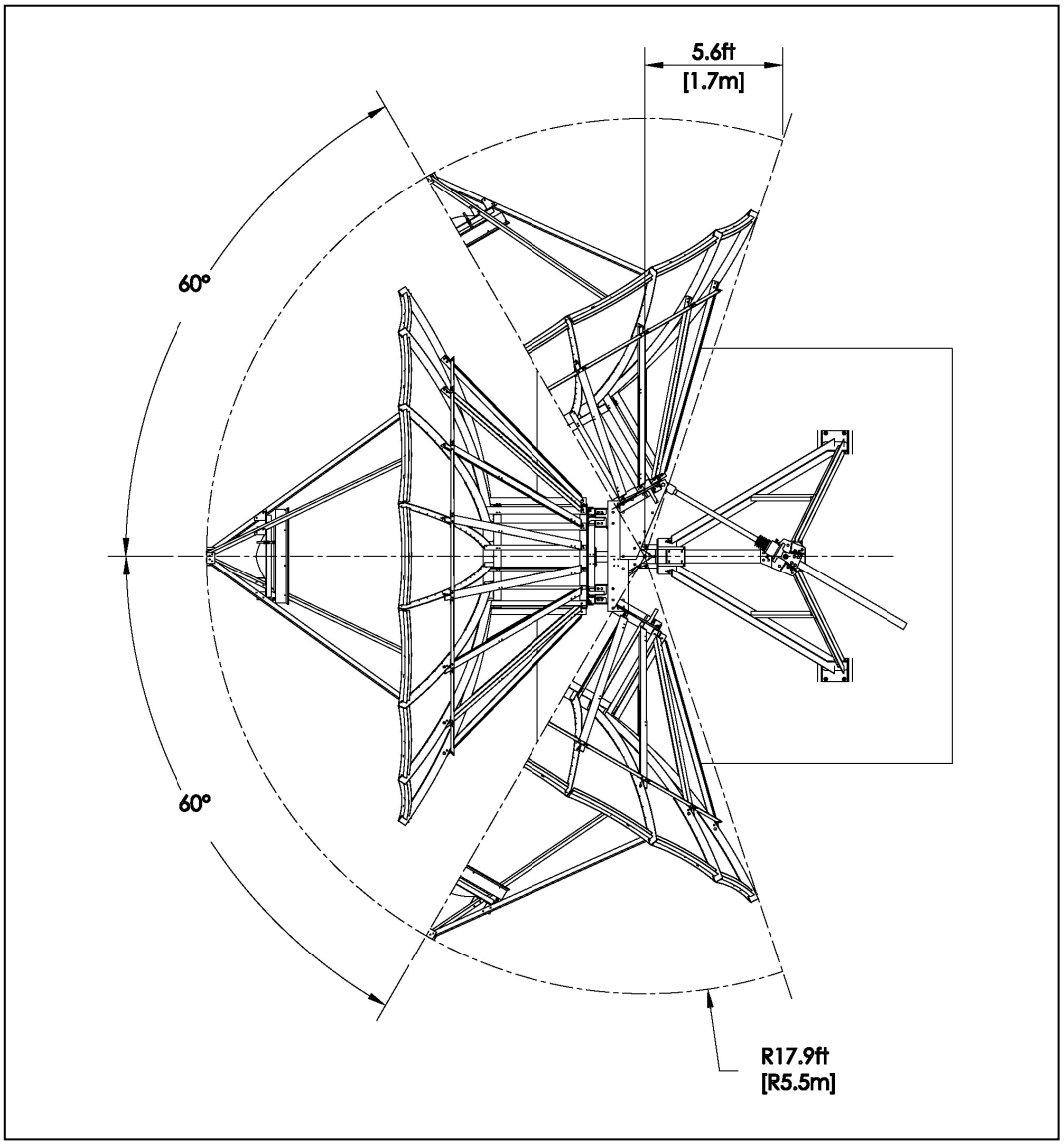

Figure 5

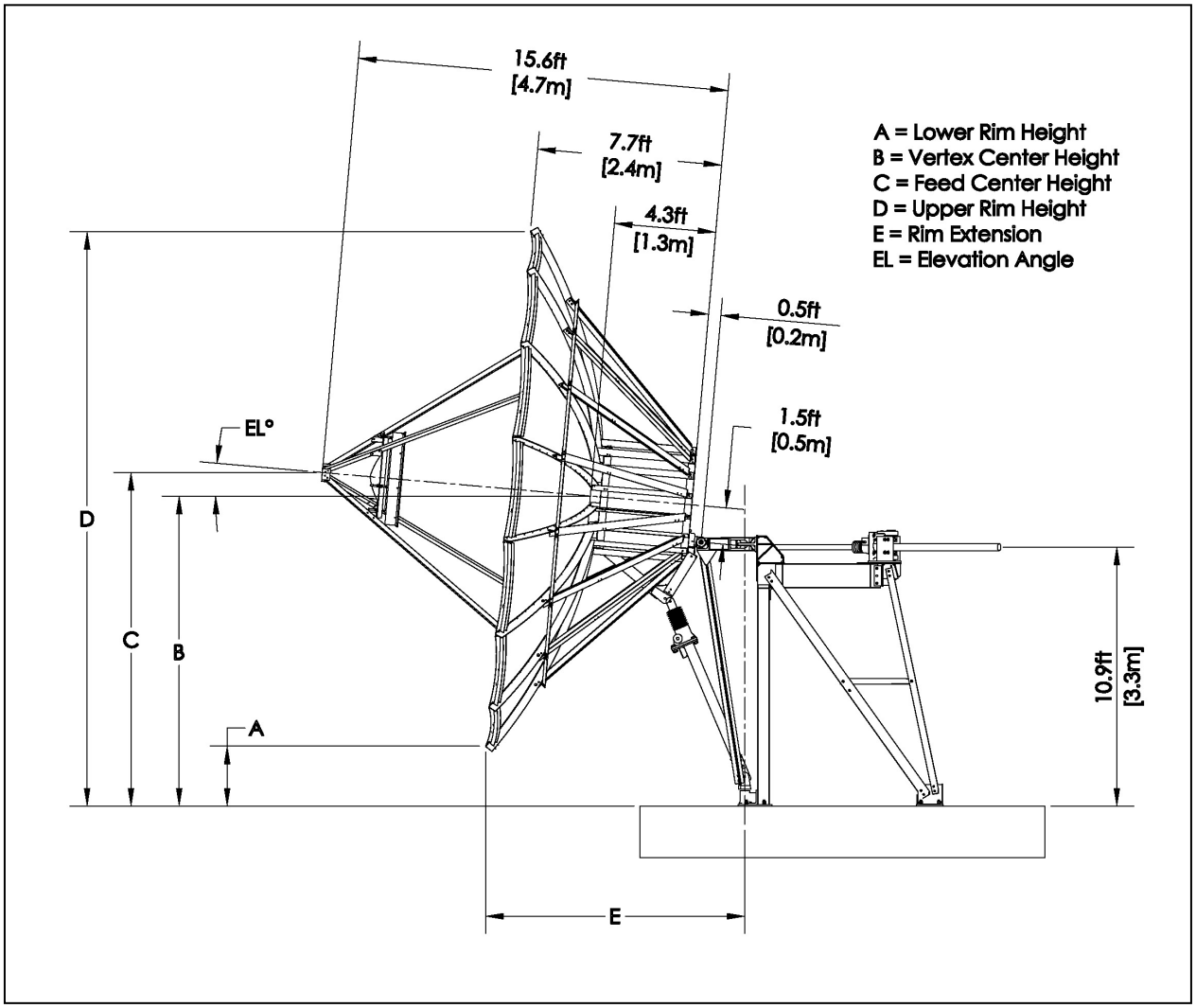
15.6ft
[4.7m]
7.7ft
[2.4m]
4.3ft
[1.3m]
0.5ft
[0.2m]
1.5ft
[0.5m]
A = Lower Rim Height
B = Vertex Center Height
C = Feed Center Height
D = Upper Rim Height
E = Rim Extension
EL = Elevation Angle
EL°
D
C
B
A
E
10.9ft
[3.3m]

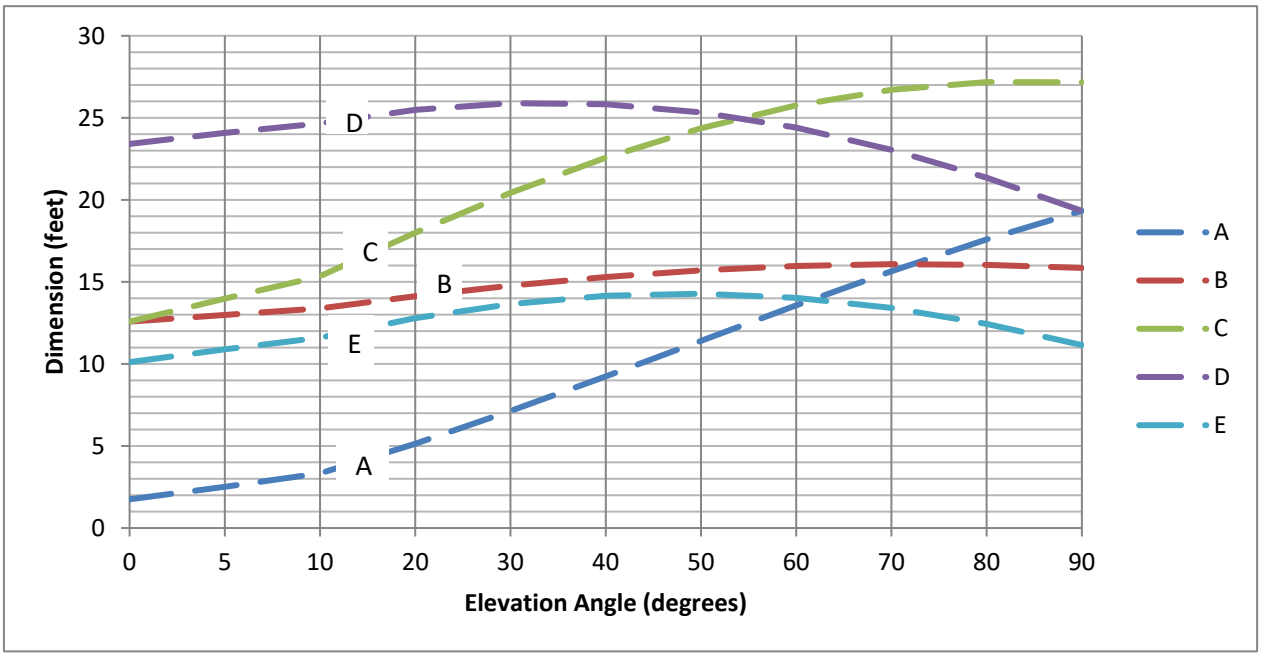
Dimension (feet)
Elevation Angle (degrees)
0
5
10
15
20
25
30
0
5
10
20
30
40
50
60
70
80
90
A
B
C
D
E

Figure 6

Antenna Geometry for ES65-2-PF

Basic dimensional characteristics and azimuth adjustment range capabilities are shown in Figure 7.

Figure 8 illustrates varying dimensions from ground reference of selected antenna points as the elevation angle fluctuates from 0° to 90°.

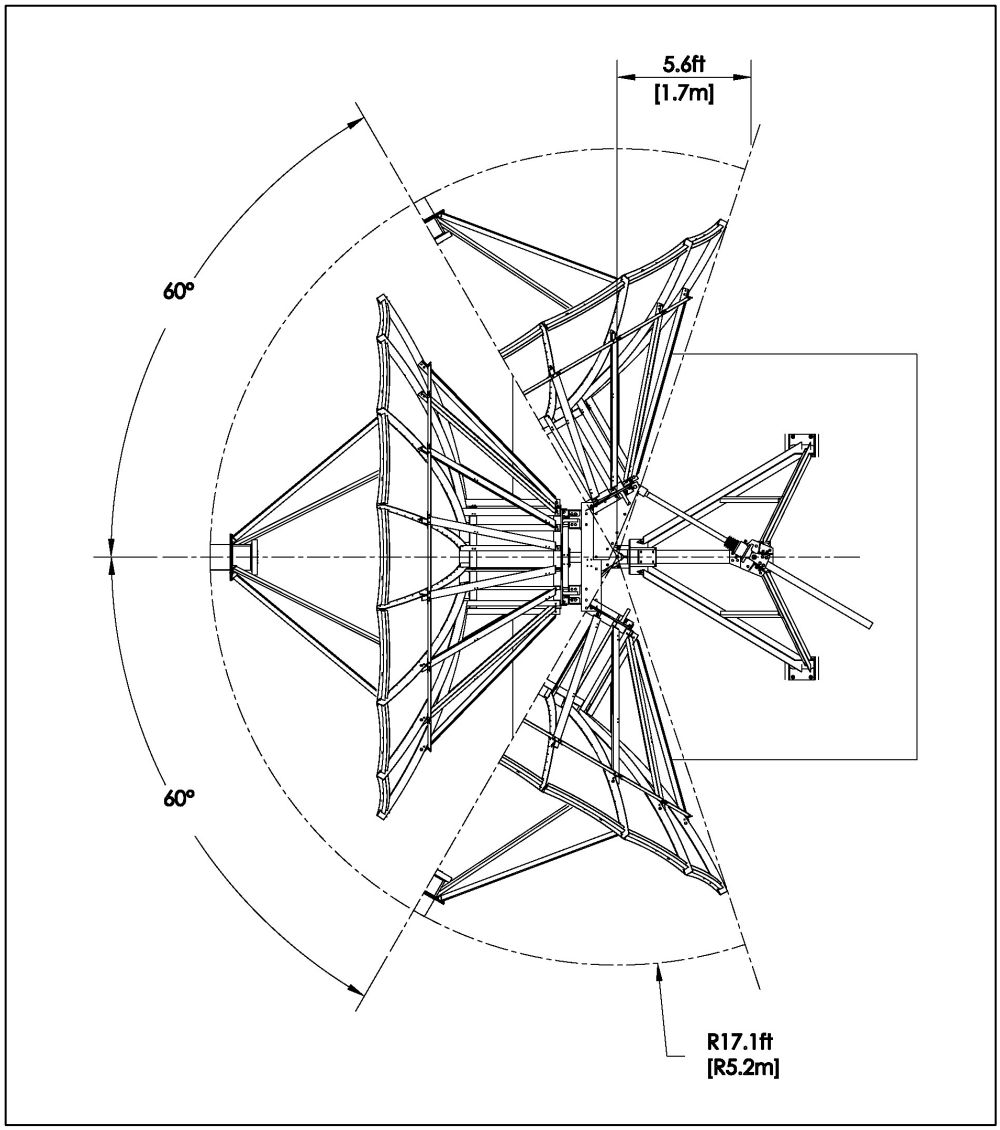

Figure 7

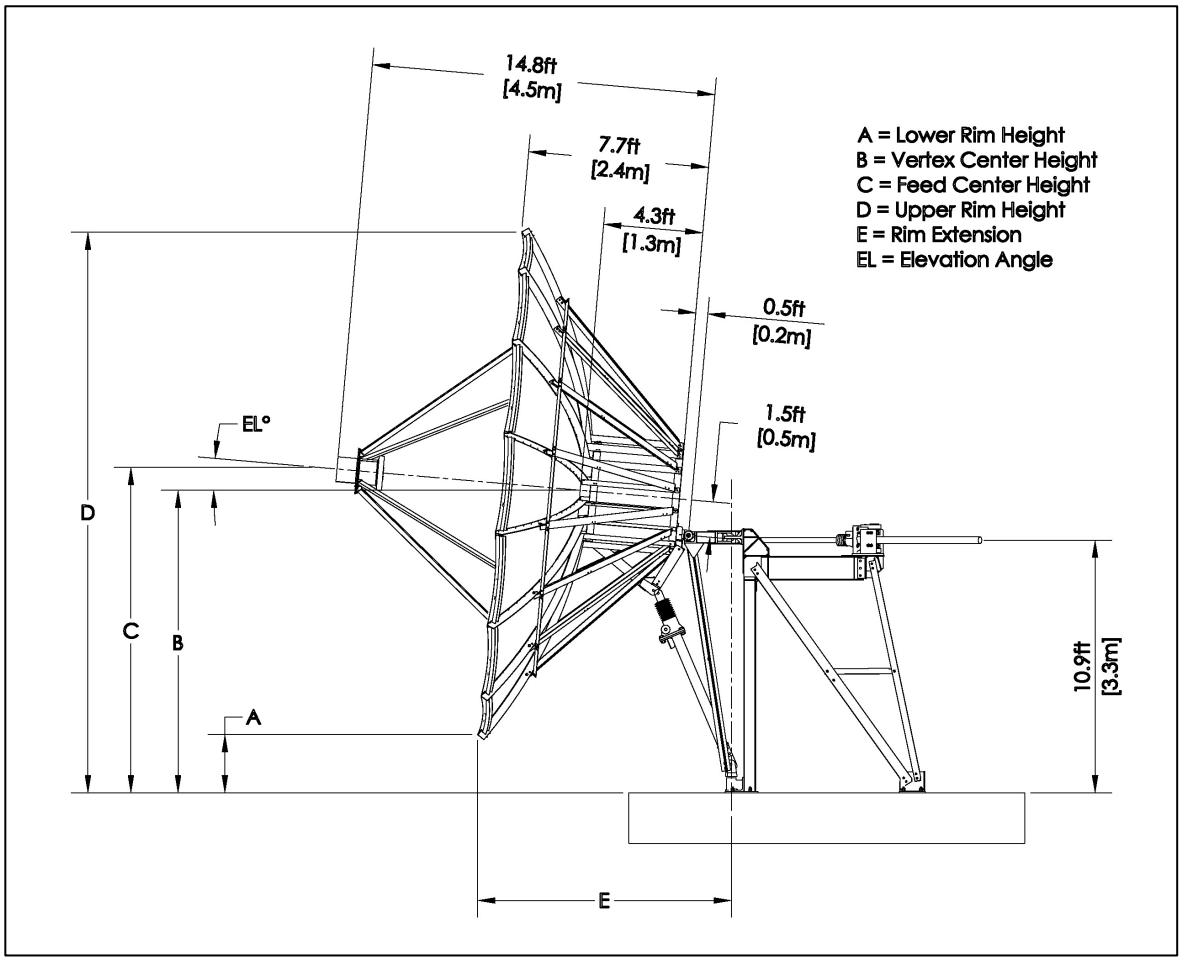
14.8ft
[4.5m]
7.7ft
[2.4m]
4.3ft
[1.3m]
0.5ft
[0.2m]
1.5ft
[0.5m]
A = Lower Rim Height
B = Vertex Center Height
C = Feed Center Height
D = Upper Rim Height
E = Rim Extension
EL = Elevation Angle
EL°
D
C
B
A
E
10.9ft
[3.3m]

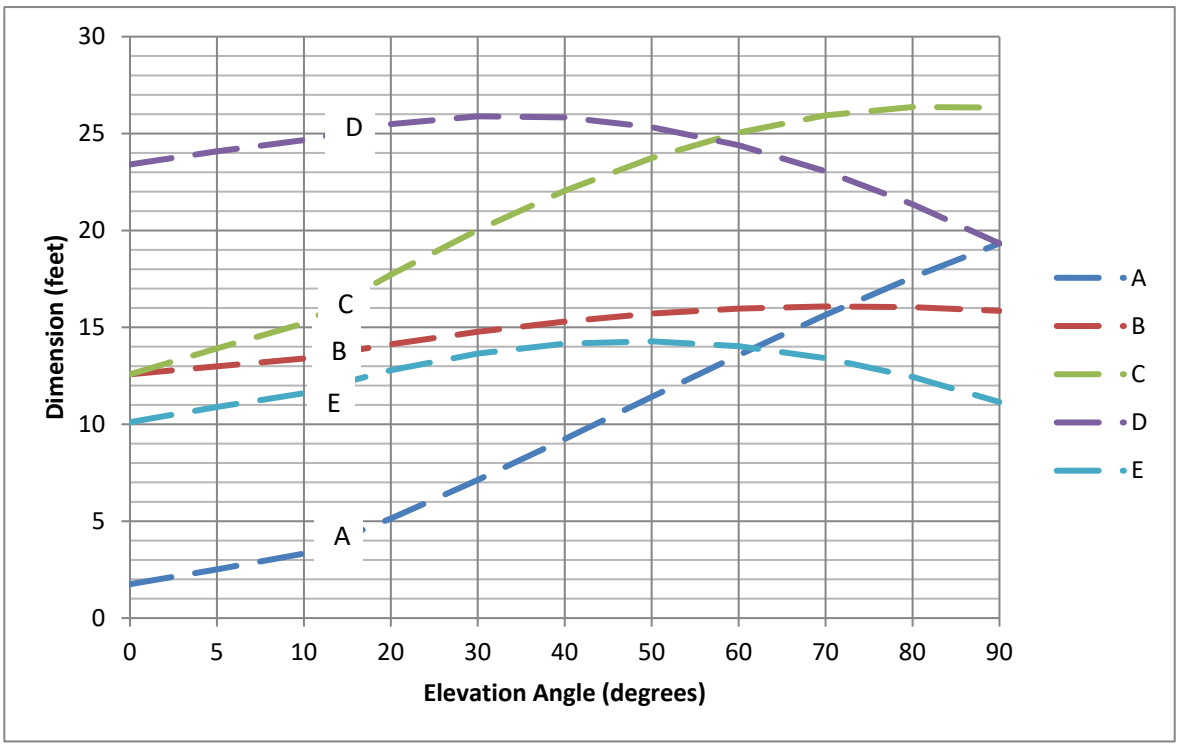
Dimension (feet)
Elevation Angle (degrees)
0
5
10
15
20
25
30
0
5
10
20
30
40
50
60
70
80
90
A
B
C
D
E

Figure 8