REV.	DESCRIPTION
K	REPLACED FOUNDATION LOADS TABLE ON SHEET 2

NOTES:

GENERAL NOTES:

1. ALL DIMENSIONS ARE SHOWN IN INCHES [AND MILLIMETERS] AND (REFERENCE)

2. CONTRACTOR SHALL FIELD VERIFY ALL DIMENSIONS LOCATING EXISTING CONSTRUCTION BEFORE FABRICATION OF NEW CONSTRUCTION BEGINS

FOUNDATIONS:

1. FOUNDATIONS HAVE BEEN DESIGNED TO REST ON UNDISTURBED STANDARD SOIL (PER EIA-411-A & RS-222-D) REFER TO TABLE 1 FOR SOIL DESIGN PARAMETERS

2. BACKFILL SHALL BE SUITABLE EXCAVATED MATERIAL OR OTHER SUITABLE MATERIAL COMPACTED IN 6" LIFTS TO 95% OF MAXIMUM DENSITY AS DETERMINED BY ASTM D1557

3. THIS FOUNDATION IS A TYPICAL DESIGN ONLY. CERTIFICATION OF ITS SUITABILITY FOR A PARTICULAR INSTALLATION BY A PROFESSIONAL ENGINEER IS REQUIRED PRIOR TO ITS USE FOR ACTUAL FABRICATION

4. IF THIS FOUNDATION IS TO BE LOCATED IN AN AREA WHERE THE ANNUAL FROST PENETRATION DEPTH EXCEEDS THE DEPTH SHOWN PER FOOTING THICKNESS PER TABLE 1 (SHEET 2), THE LOCAL BUILDING CODE SPECIFYING A MINIMUM REQUIRED FOUNDATION DEPTH SHOULD BE CONSULTED

CONCRETE:

1. CONCRETE & RELATED WORK SHALL BE MIXED, PLACED AND CURED IN ACCORDANCE WITH THE "BUILDING CODE REQUIREMENTS FOR REINFORCED CONCRETE" ACI 318 AND "SPECIFICATIONS FOR STRUCTURAL CONCRETE" ACI 301, PUBLICATION SP-15

2. CONCRETE SHALL DEVELOP COMPRESSIVE STRENGTH OF AT LEAST 3500 PSI [25 MPa] IN 28 DAYS WITH A MAXIMUM SLUMP OF 3" [76] AT TIME OF PLACING. CEMENT SHALL BE NORMAL PORTLAND CEMENT (TYPE 10) UNLESS LOCAL SOIL CONDITIONS REQUIRE THE USE OF SULPHATE RESISTANT CEMENT

3. CONCRETE SUBJECTED TO FREEZE-THAW CYCLES TO BE AIR ENTRAINED TO 5%-8%

4. REINFORCING BARS SHALL CONFORM TO ASTM A615 (SI) GRADE 60 DEFORMED TYPE Fy = 60000 PSI [400 MPa]

5. UNLESS OTHERWISE NOTED, CONCRETE COVER FOR REINFORCING BARS SHALL CONFORM TO THE MINIMUM REQUIREMENTS OF ACI 318

6. FABRICATION OF REINFORCING STEEL SHALL BE IN ACCORDANCE WITH THE "MANUAL OF STANDARD PRACTICE FOR DETAILING REINFORCED CONCRETE STRUCTURES" ACI 315

7. PROVIDE 3/4" X 45° [19 X 45°] CHAMFER ON ALL EXPOSED CONCRETE EDGES

8. A TOLERANCE OF ±1/8" [3] APPLIES TO ALL ANCHOR BOLT LAYOUT DIMENSIONS

9. LEVEL ALL PLATES FOR STRUTS INDIVIDUALLY AND TO WITHIN ±1/4" [6] OF EACH OTHER

10. LEVEL PLATE FOR ANTENNA TO WITHIN 0.1° OF HORIZONTAL

11. KEEP ALL NUTS AND FLAT WASHERS NOT USED TO SECURE ANCHOR PLATES. THESE WILL BE USED LATER FOR SECURING THE PEDESTAL AND OUTRIGGERS

GROUNDING SYSTEM:

1. THE GROUNDING SYSTEM SHOWN (SHEET 4) REPRESENTS THE MINIMUM REQUIREMENTS TO ACHIEVE SATISFACTORY GROUNDING. ACTUAL SITE CONDITIONS AND SOIL RESISTIVITY LEVELS WILL DETERMINE FINAL GROUNDING SYSTEM DESIGN TO COMPLY WITH THE FOLLOWING NOTES BELOW

2. ALL GROUND RING, GROUND ROD AND ANTENNA STRUCTURE CONNECTIONS TO BE ERICOO PRODUCTS INC. CALWELDO EXOTHERMIC TYPE WELDED ELECTRICAL CONNECTIONS OR EQUIVALENT

3. GROUND RODS SHALL BE DRIVEN TO A DEPTH BELOW PERMANENT FROST LEVEL (MINIMUM DEPTH SHOWN) AS DICTATED BY GEOGRAPHICAL LOCATION

4. THE ANTENNA STRUCTURE SHALL BE CONNECTED TO A GROUNDING ELECTRODE SYSTEM CONSISTING OF A NUMBER OF INTERCONNECTED GROUND RODS. THE SYSTEM SHALL MEET THE REQUIREMENTS OF THE UNDERWRITERS' LABORATORIES PUBLICATION No. UL96A FOR LIGHTNING PROTECTION

5. THE GROUNDING ELECTRODE SYSTEM TO EARTH RESISTANCE SHALL NOT EXCEED 10 ohms, MEASURED WITH A BIDDLE 3 TERMINAL DEVICE OR EQUIVALENT. THE GROUNDED CONDUCTOR (NEUTRAL) SUPPLIED TO ALL AC EQUIPMENT ON THE ANTENNA STRUCTURE SHOULD BE DISCONNECTED BEFORE TAKING MEASUREMENT

6. ACTUAL SITE CONDITIONS MAY REQUIRE LONGER GROUND RODS, ADDITIONAL GROUND RODS AND/OR LAND FILL ADDITIVES TO REDUCE SOIL RESISTIVITY LEVELS

7. AVOID SHARP BENDS WHEN ROUTING GROUNDING WIRE. GROUNDING WIRES TO ANTENNA STRUCTURE TO BE RUN AS SHORT AND AS STRAIGHT AS POSSIBLE

8. FINAL GRADE DIRECTLY ABOVE GROUNDING ELECTRODE SYSTEM TO BE WATER PERMEABLE

CONDUIT:

1. PRIME POWER STUB-UPS FOR C1 & C2 TO INCLUDE A 50-INCH [1270mm] PIG TAIL TO PERMIT THE FEEDER WIRE CONNECTION TO THE ANTENNA LOCATED LOAD CENTERS

2. CONDUITS C2 & C3 TO INCLUDE PULL ROPES FROM CUSTOMER BUILDING TO THE 9.4M ANTENNA FOUNDATION LOCATION

3. ALL CONDUITS TO STUB-UP 6-INCHES [152.4mm] ABOVE THE TOP OF THE ANTENNA FOUNDATION

4. ALL CONDUITS TO HAVE CAPS INSTALLED AFTER INSTALLATION TO PREVENT THEM FROM FILLING UP WITH WATER

5. INTERFACILITY CONDUIT BETWEEN THE CUSTOMER BUILDING AND THE 9.4m ANTENNA FOUNDATION TO INCLUDE SWEPT BENDS, NOT RIGHT ANGLES

6. INTERFACILITY CONDUIT BETWEEN THE CUSTOMER BUILDING AND THE 9.4m ANTENNA FOUNDATION TO INCLUDE PULL BOXES AS REQUIRED

7. FOR HIGHER SIGNAL DENSITY PROJECTS, KRATOS RECOMMENDS A FOURTH SIGNAL CONDUIT C6, WITH A DIAMETER OF 4 OR MORE INCHES

8. DO NOT STUB UP ANY CONDUITS DIRECTLY BEHIND THE TWO REAR OUTRIGGER FEET. THIS WILL CAUSE INTERFERENCE WITH THE TRAVEL OF THE ROLLING STAIRCASE

CONDUIT SCHEDULE

CONDUIT	PURPOSE	FROM	TO	SIZE INCH [MM]	NOTES
C1	UTILITY POWER	CUSTOMER LOAD CENTER	9.4M ANTENNA FOUNDATION	4 [101.6] 6 [152.4]	WITHOUT DE-ICE WITH DE-ICE
C2	TECHNICAL POWER	CUSTOMER LOAD CENTER	9.4M ANTENNA FOUNDATION	4 [101.6]	ALL 9.4M ANTENNA SITES
C3	SIGNAL/M&C	9.4M ANTENNA FOUNDATION	CUSTOMER BUILDING	4 [101.6]	ALL 9.4M ANTENNA SITES
C4	SIGNAL/M&C	9.4M ANTENNA FOUNDATION	CUSTOMER BUILDING	4 [101.6]	ALL 9.4M ANTENNA SITES
C5	SIGNAL/M&C	9.4M ANTENNA FOUNDATION	CUSTOMER BUILDING	4 [101.6]	MONITOR AND EXPANSION
7 C6	OPTIONAL SIGNALS	9.4M ANTENNA FOUNDATION	CUSTOMER BUILDING	4[101.6]	EXPANDED SIGNAL CPACITY

MATERIAL
N/A

FINISH
N/A

UNLESS OTHERWISE SPECIFIED ALL DIMENSIONS ARE IN INCHES
INTERPRET PER ASME Y14.5M-1994

TOLERANCES		HOLE TOLERANCES	
1 PLACE .X ±	0.1	0 - 0.125:	+.003/-.001
2 PLACE .XX ±	0.03	0.126 - 0.250:	+.004/-.001
3 PLACE .XXX ±	0.005	0.251 - 0.500:	+.006/-.001
ANGLES ±	0.1°	0.501 - 1.000:	+.008/-.001
ALL SURFACES	63		

THIRD ANGLE PROJECTION

DRAWN BY J.Richins 07MAR14
ECO 000005090466
MASS: - LBS

KRATOS
READY FOR WHAT'S NEXT

LAYOUT,TYPICAL FOUNDATION,9.4M

SIZE	CAGE CODE	DOCUMENT NO.
D	4ZTA9	7586797

STATUS	DATE	REVISION	SHEET
RELEASED TO PRODUCTION	13MAY24	K	1 OF 4

NOTICE: These drawings and specifications are the proprietary property of Kratos Antenna Solutions Corporation and may be used only for the specific purpose authorized in writing by KRATOS.

9.4m Ka Foundation Loads (on axis)
Wind speed 125 mph

K

	Loads	0° elevation				30° elevation				60° elevation				90° elevation		Max. Loads
		0° wind	60° wind	120° wind	180° wind	0° wind	60° wind	120° wind	180° wind	0° wind	60° wind	120° wind	180° wind	0° wind	90° wind	
Column Base	Fx (Lbs)	24	4,496	-8,399	23	115	923	-2,615	-14	30	567	2,762	34	9	7,076	-8,399
	Fy (Lbs)	6,921	8,326	19,322	22,521	28,013	24,856	15,254	14,460	43,037	25,950	12,858	13,152	9,390	12,050	43,037
	Fz (Lbs)	-5,109	-3,466	5,608	7,986	1,961	538	7,026	10,875	6,394	-687	6,345	13,957	-11,346	-933	13,957
	Mx (Lbs-in)	1,053,900	936,200	-371,600	-775,800	788,770	617,560	-298,390	-495,070	303,470	120,160	-171,870	-260,160	27,098	-45,171	1,053,900
	My (Lbs-in)	-585	930,140	-1,755,900	-2,333	45,953	471,100	-1,393,100	-25,341	-60	-137,290	-694,520	8	-9	-5,726	-1,755,900
	Mz (Lbs-in)	2,623	-725,570	1,379,700	3,012	-42,068	-447,610	1,335,900	25,608	1,717	189,710	949,170	1,244	357	542,920	1,379,700
Leg 1	Fx (Lbs)	9,658	7,551	-3,161	-8,419	5,686	4,690	-4,421	-6,762	579	559	-4,666	-5,564	2,766	-3,259	9,658
	Fy (Lbs)	-12,631	-9,764	4,542	11,673	-7,278	-5,932	6,262	9,451	-409	-400	6,622	7,849	-3,387	4,747	-12,631
	Fz (Lbs)	8,679	6,737	-2,748	-7,565	5,108	4,190	-3,898	-6,073	521	508	-4,155	-4,996	2,482	-2,929	8,679
Leg 2	Fx (Lbs)	-11,123	-10,020	4,179	7,688	-8,094	-6,565	2,923	6,378	-3,491	-3,061	787	5,171	-3,728	-3,046	-11,123
	Fy (Lbs)	19,286	17,228	-6,442	-12,753	14,105	11,410	-4,330	-10,524	6,271	5,597	-801	-8,485	6,718	5,620	19,286
	Fz (Lbs)	15,312	13,707	-5,587	-10,582	11,139	8,988	-3,875	-8,774	4,808	4,231	-991	-7,115	5,129	4,224	15,312
Leg 3	Fx (Lbs)	11,110	9,413	-3,119	-7,702	8,125	6,982	-4,267	-6,418	3,478	2,393	-4,075	-5,186	3,729	-1,976	11,110
	Fy (Lbs)	19,263	16,548	-5,309	-12,778	14,177	12,332	-7,245	-10,606	6,248	4,379	-6,807	-8,511	6,719	-3,100	19,263
	Fz (Lbs)	15,294	13,044	-4,458	-10,601	11,191	9,662	-6,020	-8,835	4,789	3,276	-5,698	-7,136	5,130	-2,751	15,294
Leg 4	Fx (Lbs)	-9,670	-9,062	5,909	8,403	-5,690	-4,615	4,068	6,735	-595	-1,223	1,415	5,545	-2,764	-2,671	-9,670
	Fy (Lbs)	-12,647	-11,862	8,363	11,652	-7,286	-5,858	5,867	9,417	-432	-1,290	2,269	7,823	-3,385	-3,262	-12,647
	Fz (Lbs)	8,690	8,192	-5,402	-7,551	5,116	4,173	-3,729	-6,052	536	1,090	-1,307	-4,980	2,480	2,399	8,690

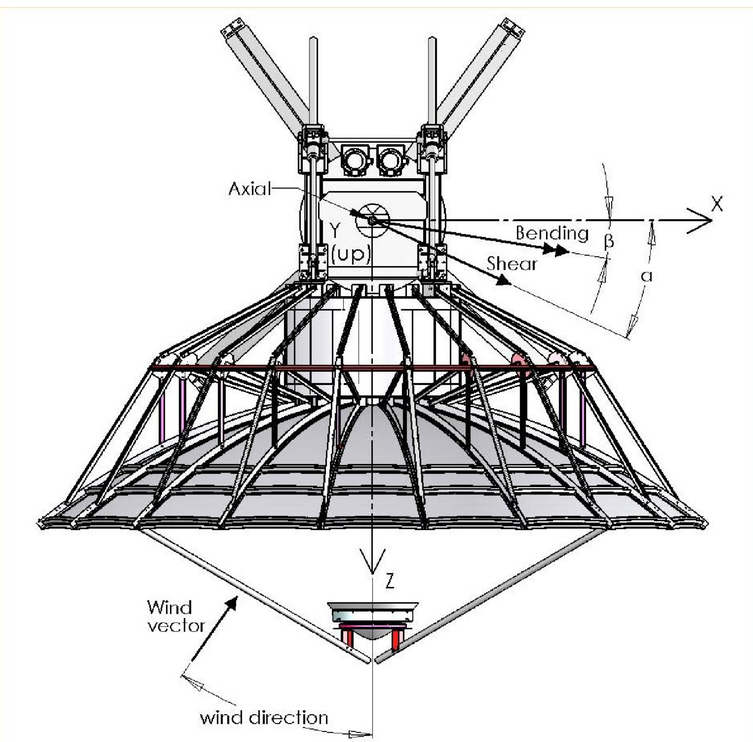

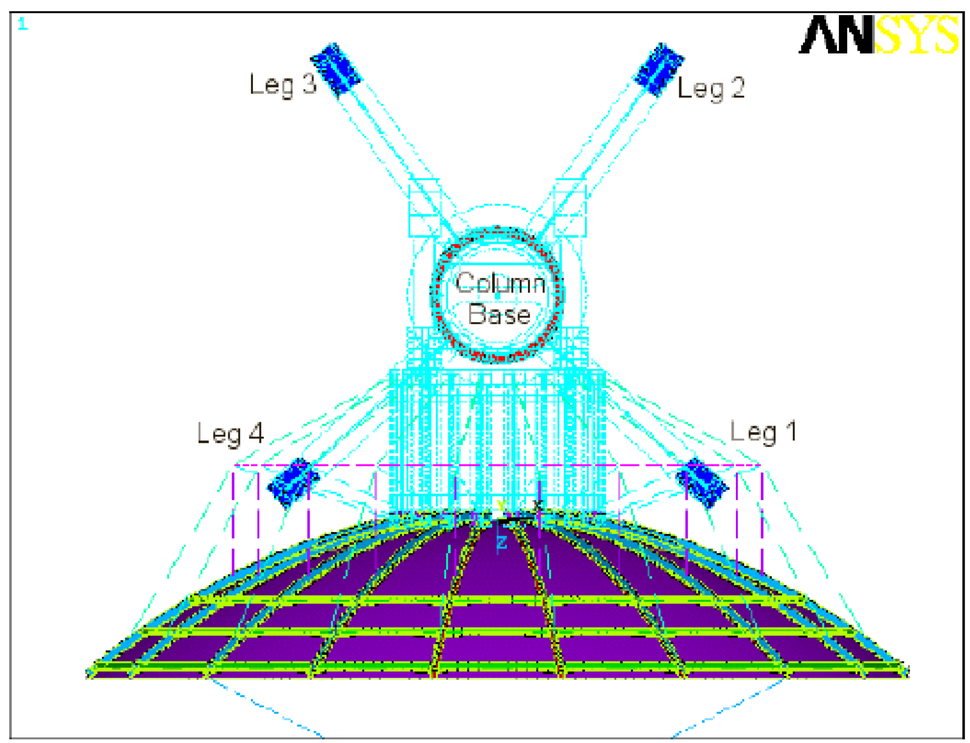

KRATOS
READY FOR WHAT'S NEXT™

LAYOUT,TYPICAL FOUNDATION,9.4M

SIZE	CAGE CODE	DOCUMENT NO.
D	4ZTA9	7586797

NOTICE: These drawings and specifications are the proprietary property of Kratos Antenna Solutions Corporation and may be used only for the specific purpose authorized in writing by KRATOS.

REVISION	SHEET
K	2 OF 4

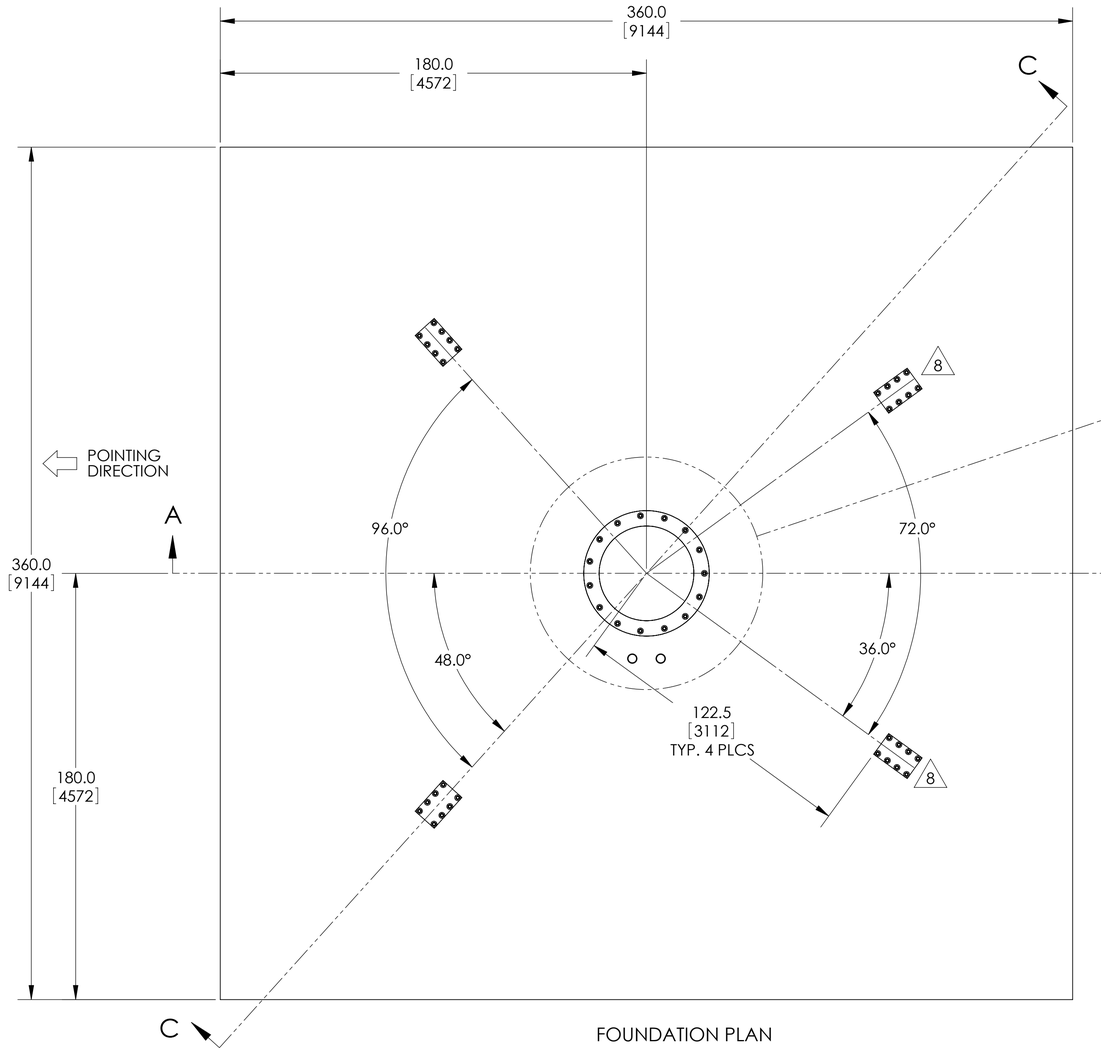

FOUNDATION PLAN

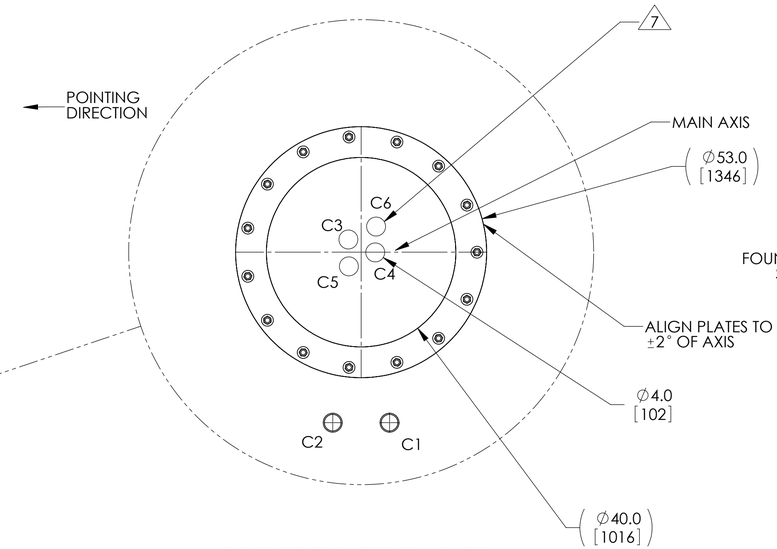

CONDUIT DETAIL: STUB-UP LOCATION
DETAIL B
SCALE 1 : 16

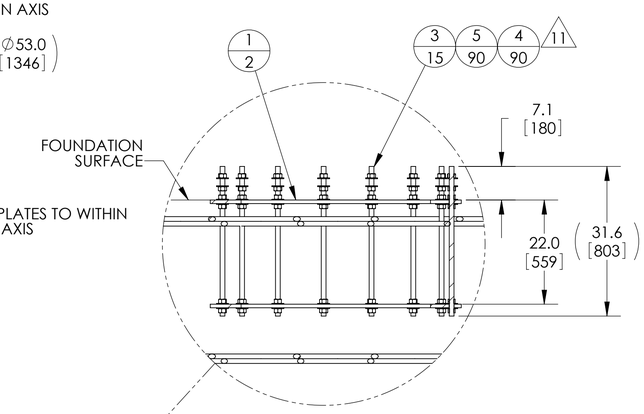

DETAIL E
SCALE 1 : 16

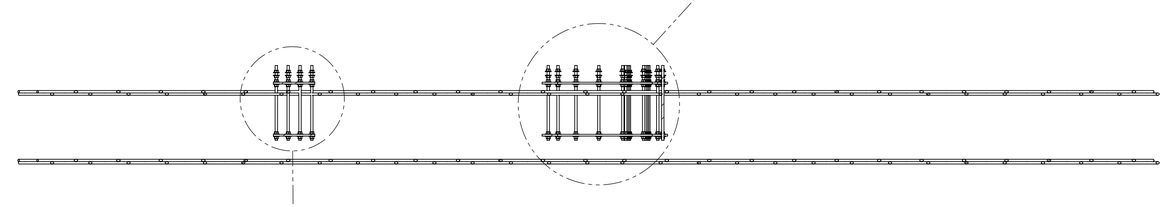

SECTION C-C
(ROTATED 90 DEG. CCW)

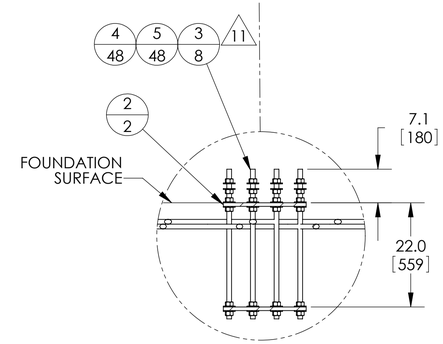

OUTRIGGER ANCHOR
4 PLACES
DETAIL F
SCALE 1 : 16

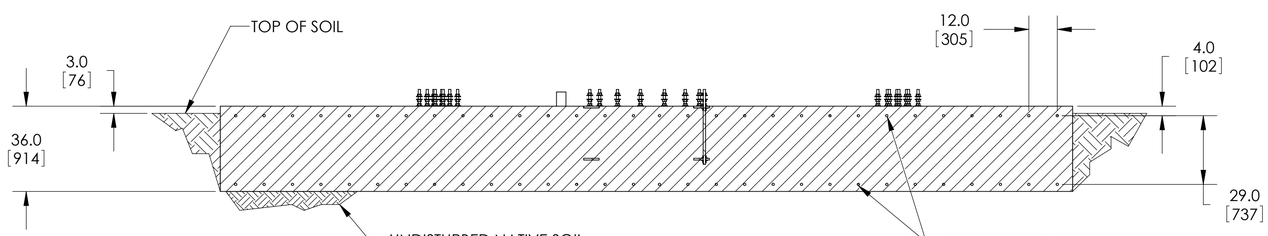

SECTION A-A

TABLE 1				
SOIL BEARING CAPACITY	MODULUS OF SUBGRADE REACTION	FOOTING THICKNESS	VOLUME OF CONCRETE	WEIGHT OF REINFORCING
2000 Psf [100kPa]	100 KIPS/ft3 [15000 Kn/M3]	36.0 [914]	100 CUBIC YARDS [76 CUBIC METER]	4.70 TONS [4.3 METRIC TONS]

QTY.	ITEM NO.	PART NUMBER	DESCRIPTION
282	5	9999-182	NUT,HEX,1-8,STL,HIGH STRENGTH,GALV
282	4	9997-177	WSHR,FLT,1.0,0.172,STL,GALV
47	3	175364	ANCHOR BOLT
8	2	175368	PLATE,STRUT,ANCHOR
2	1	7579320	PLATE, ANCHOR BOLT, 8.1M
KIT 7585069 BILL OF MATERIALS FOR REFERENCE ONLY			

KRATOS
READY FOR WHAT'S NEXT™

LAYOUT,TYPICAL FOUNDATION,9.4M

SIZE	CAGE CODE	DOCUMENT NO.
D	4ZTA9	7586797

NOTICE: These drawings and specifications are the proprietary property of Kratos Antenna Solutions Corporation and may be used only for the specific purpose authorized in writing by KRATOS.

REVISION	SHEET
K	3 OF 4

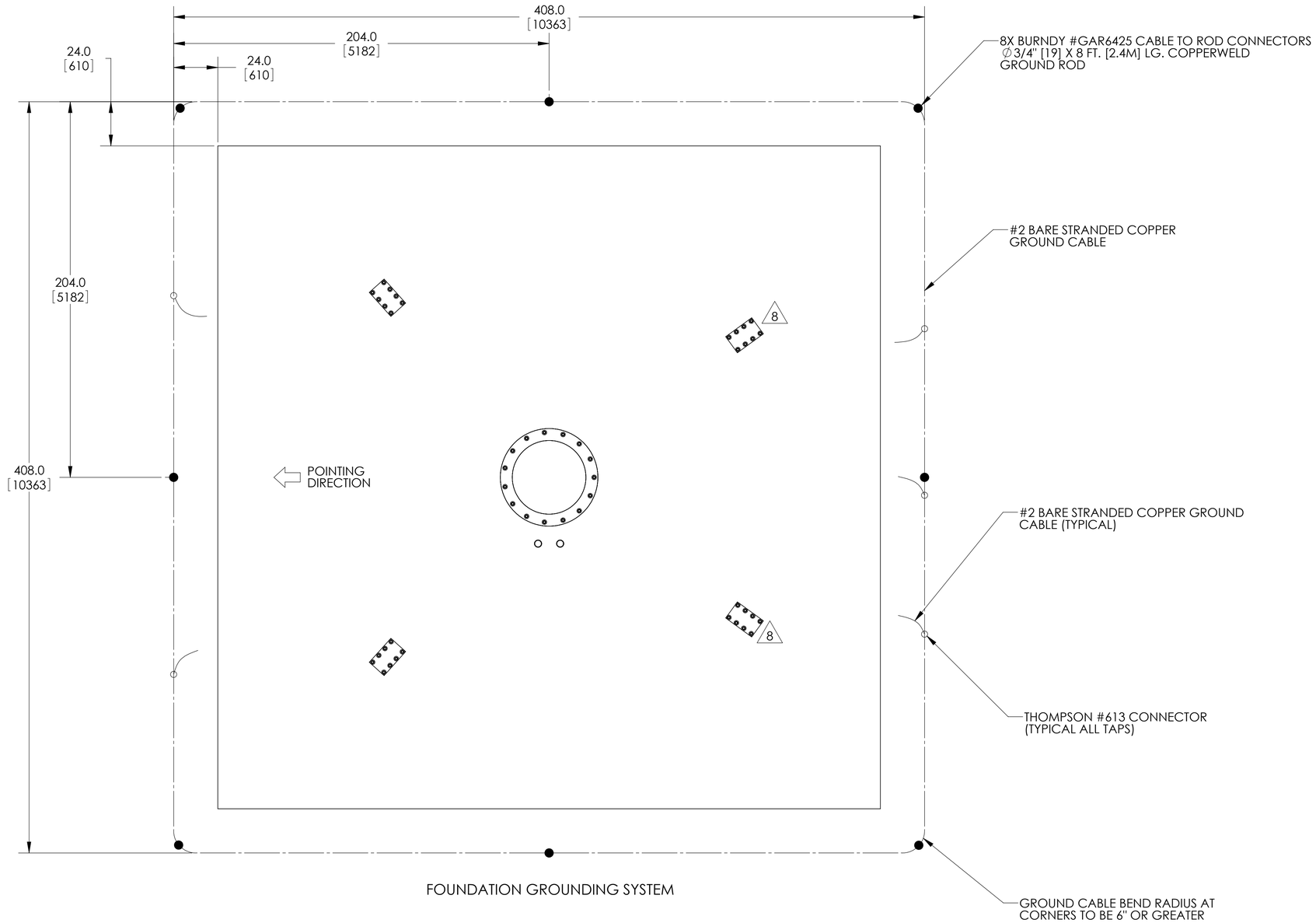

FOUNDATION GROUNDING SYSTEM

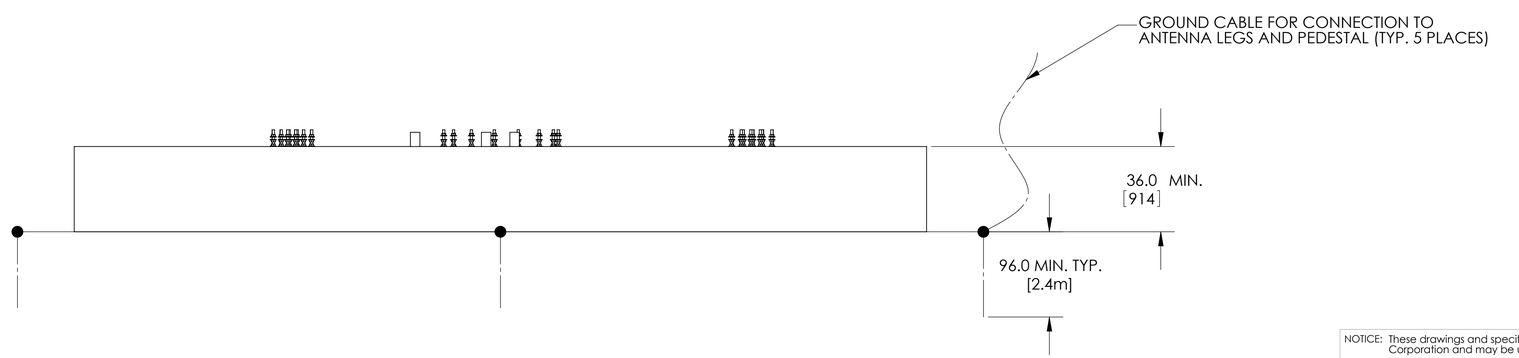

KRATOS
READY FOR WHAT'S NEXT

LAYOUT,TYPICAL FOUNDATION,9.4M

SIZE	CAGE CODE	DOCUMENT NO.	REVISION	SHEET
D	4ZTA9	7586797	K	4 OF 4

NOTICE: These drawings and specifications are the proprietary property of Kratos Antenna Solutions Corporation and may be used only for the specific purpose authorized in writing by KRATOS.