Foundation Specifications

for 6.5-Meter High Wind Earth Station Antenna

Introduction

This document specifies the typical foundation characteristics, designs, requirements, and dimensional specifications for the Kratos 6.5-Meter High Wind Earth Station Antenna. The foundation design enables the antenna to meet wind gusting of 45 to 65 mph operational requirements. The foundation also allows for 150 mph survival in any operating position or 200 mph survival at 90° elevation.

Foundation Loading Characteristics

The 6.5m foundation consists of a reinforced concrete pad. Foundation loads are applied to 3 points on the foundation pad as shown in Figure 1. Positive applied forces are in the direction of the X, Y and Z coordinate system.

Varying load conditions are dependent upon incident wind angle and elevation/azimuth angles of the antenna. Foundation loads including antenna weight plus various wind conditions are listed in Table 1. Wind Vector (WV) in Table 1 is the angle of approach into the reflector measured clockwise from the reflector normal pointing direction as shown in Figure 1. Foundation Loads at 90° elevation 200 mph (stow condition), are provided but do not exceed the worst case 150 mph survival loads.

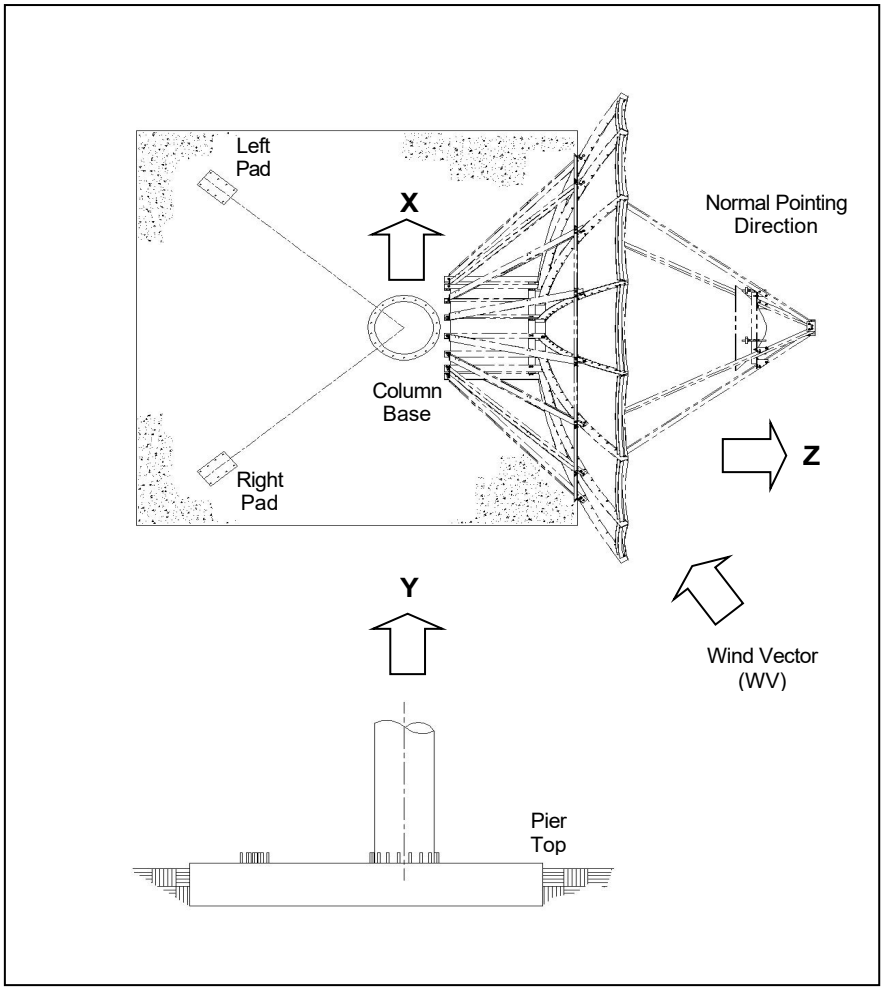

Figure 1

© 2021 Kratos Defense & Security Solutions, Inc.

Foundation Designs

The foundation design for a particular site is dependent upon local soil conditions. Soil borings and foundation analysis should be performed by a qualified civil engineer.

A typical foundation design based on normal soil conditions is shown Figure 2. This design represents the minimum requirements for the foundation, and defines the interface requirements between the antenna and mount. A copy of this design is available from Kratos on request. Refer to Drawing 303544.

Anchor Bolt Requirements

A typical anchor bolt installation configuration and corresponding dimensions are shown in Figure 3.

Kratos Type 303546 Foundation Kit includes, anchor bolts, and required mounting as shown in Figure 3.

Foundation Orientation

Proper foundation orientation is required to obtain the desired orbital arc coverage from a particular site location. The required azimuth and elevation angles of the antenna, relative to the mount, must be determined to establish the appropriate foundation orientation.

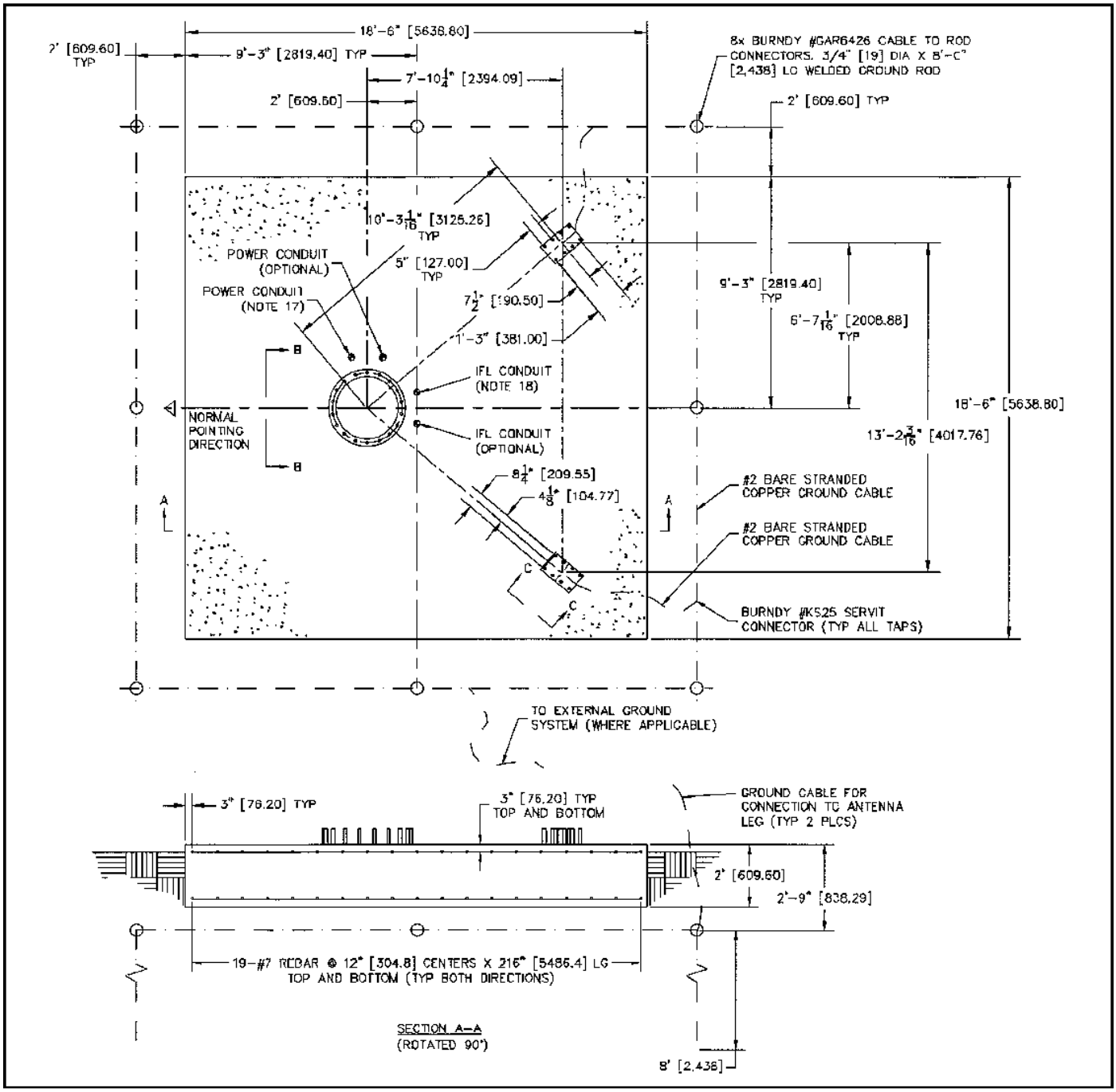

Figure 2

Table 1 6.5M Foundation Load Table

Wind = 150 mph

LOAD CASE	FOUNDATION POINT	FX	FY lbs	FZ	MX	MY in.lbs	MZ
EL0W0	Column Base	39	23841	-6477	**1597937**	2124	-1715
	Left Pad	**9873**	**-15659**	**-11787**			
	Right Pad	**-9911**	**-15718**	**-11831**			
EL0W60	Column Base	-406	19438	-6226	1402140	-487358	242390
	Left Pad	8002	-12747	-9552			
	Right Pad	-9090	-14439	-10852			
EL0W120	Column Base	885	-18583	664	-546988	**969786**	**-483526**
	Left Pad	-2596	3754	3097			
	Right Pad	4723	7061	5641			
EL0W180	Column Base	-5	**-30363**	2919	-1159437	811	-123
	Left Pad	-7466	11334	8913			
	Right Pad	7476	11350	8925			
EL30W0	Column Base	101	-131	**-7820**	1226072	-26154	12741
	Left Pad	6999	-11187	-8357			
	Right Pad	-7183	-11472	-8575			
EL30W60	Column Base	521	-592	-5675	980851	-249979	124007
	Left Pad	5137	-8289	-6135			
	Right Pad	-6539	-10468	-7805			
EL30W120	Column Base	-1501	-14960	-1149	-456361	786700	-392239
	Left Pad	-1405	1902	1680			
	Right Pad	5725	8618	6831			
EL30W180	Column Base	-25	-20229	-1236	-797992	13182	-6680
	Left Pad	-6066	9155	7242			
	Right Pad	6147	9280	7337			
EL60W0	Column Base	46	-22859	-5720	530665	-2521	885
	Left Pad	2773	-4607	-3311			
	Right Pad	-2784	-4623	-3323			
EL60W60	Column Base	-456	-10962	-1416	280825	86077	-42801
	Left Pad	2428	-4068	-2897			
	Right Pad	-1431	-2520	-1711			
EL60W120	Column Base	**-2467**	-9637	-1339	-261861	409187	-204017
	Left Pad	234	-647	-272			
	Right Pad	4689	7006	5591			
EL60W180	Column Base	-71	-14436	-3285	-470877	-8020	3694
	Left Pad	-4275	6367	5103			

	Right Pad	4346	6477	5188			
EL90W0	Column Base	158	7190	2581	74705	4757	-2384
	Left Pad	2107	-3393	-2514			
	Right Pad	-2243	-3603	-2675			
EL90W60	Column Base	-876	-206	546	35848	35104	-17434
	Left Pad	1301	-2136	-1550			
	Right Pad	428	551	508			
EL90W120	Column Base	-915	-2822	-450	-40233	30723	-15341
	Left Pad	490	-873	-581			
	Right Pad	1272	1866	1516			
EL90W180	Column Base	-38	-4098	-889	-77317	-3785	1629
	Left Pad	-765	1079	913			
	Right Pad	810	1148	967			

Bold values are maximums.

Wind = 200 mph Stowed at Elevation 90

LOAD CASE	FOUNDATION POINT	FX	FY lbs	FZ	MX	MY in.lbs	MZ
EL90WO	Column Base	281	12782	4588	132809	8457	-4238
	Left Pad	3745	-6032	-4470			
	Right Pad	-3987	-6406	-4756			
EL90W60	Column Base	-1558	-367	970	63729	62407	-30993
	Left Pad	2313	-3798	-2756			
	Right Pad	760	979	903			
EL90W120	Column Base	-1627	-5017	-800	-71525	54619	-27272
	Left Pad	871	-1552	-1034			
	Right Pad	2262	3318	2695			
EL90W180	Column Base	-67	-7286	-1580	-137453	-6728	2897
	Left Pad	-1359	1918	1624			
	Right Pad	1440	2041	1719			

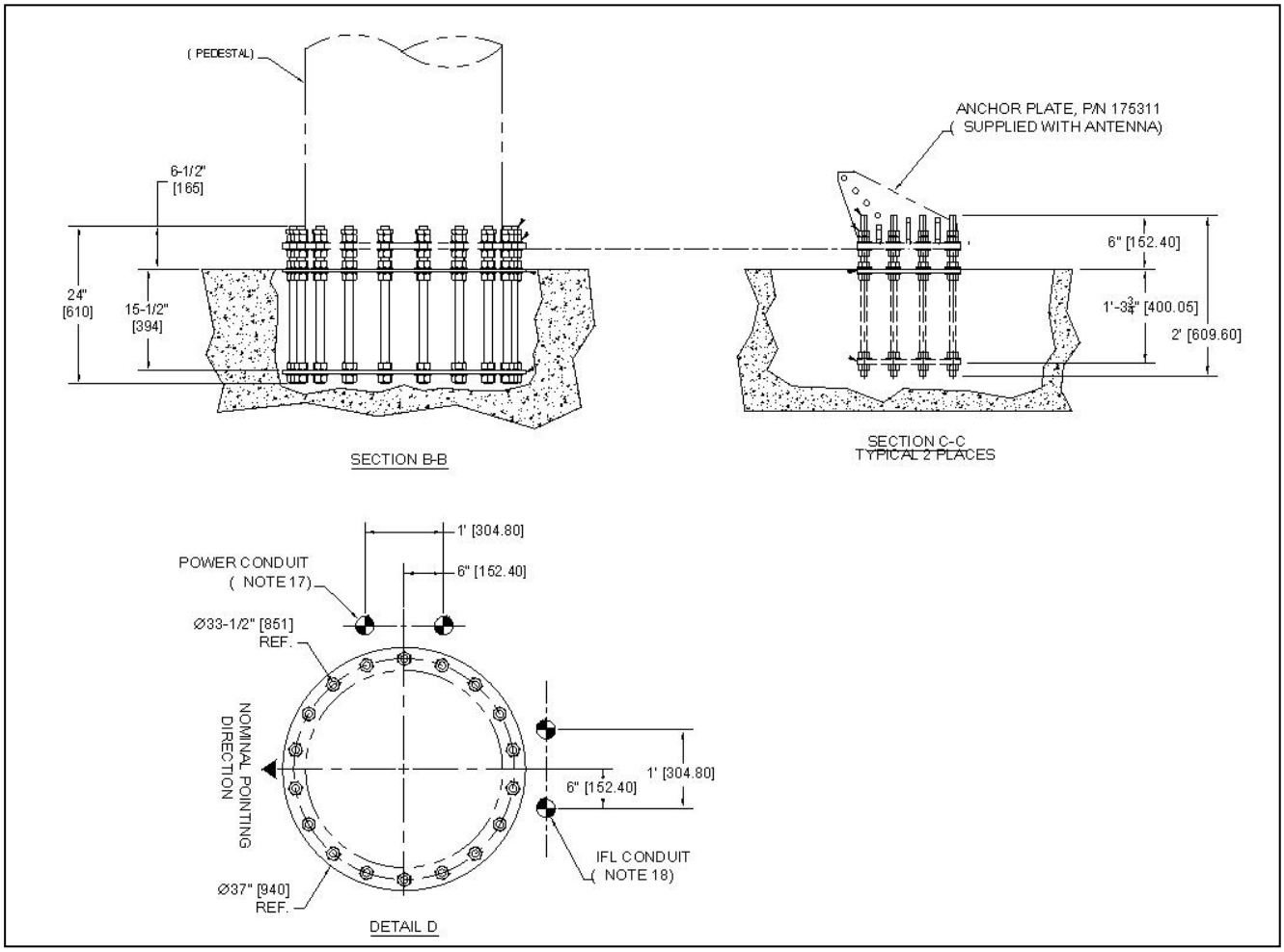
(PEDESTAL)
6-1/2"
[165]
24"
[610]
15-1/2"
[394]
SECTION B-B
ANCHOR PLATE, P/N 175311
(SUPPLIED WITH ANTENNA)
6" [152.40]
1'-3¾" [400.05]
2' [609.60]
SECTION C-C
TYPICAL 2 PLACES
1' [304.80]
6" [152.40]
POWER CONDUIT
(NOTE 17)
Ø33-1/2" [851]
REF.
NOMINAL POINTING
DIRECTION
1' [304.80]
6" [152.40]
IFL CONDUIT
(NOTE 18)
Ø37" [940]
REF.
DETAIL D

Figure 3

General Notes - Pedestal Mount

General Notes

1. All dimensions are shown in inches [and millimeters] and (reference).

2. Contractor shall field verify all dimensions locating existing construction before fabrication of new construction begins.

3. Ground rods shall be driven to depths as shown (below permanent moisture level) and ground system resistance measured. The antenna structure shall be connected to a grounding system consisting of a number of interconnected ground rods. The system shall meet the standards of the Underwriters' Laboratories Publication No. UL96A for Lightning protection. The ground rod system-to-earth resistance shall not exceed 1.0 Ohm at any time during the year.

4. Grounding system shown is the minimum necessary. Local conditions will dictate grounding system design.

5. For electrical power to antenna, 1-1/2" [38] to 2-1/2" [64] size conduit is recommended. Type and depth to bury conduit to be determined by customer, in compliance with local codes. Direction to route conduit to be determined by location of communications building/shelter. Conduit to extend 6" [152] minimum above surface of foundation slab. Open ends of conduit to be sealed to prevent moisture and foreign matter contamination.

6. IFL conduit required if no other means of routing cables are provided.

7. For routing IFL cables, 4" [100] size conduit is recommended. Type and depth to bury conduit to be determined by customer, in compliance with local codes. Location of conduit on foundation and direction to route conduit to be determined by location of communications building/shelter. Conduit to extend 36" [914] minimum above surface of foundation slab. All bends to be large radius. Maximum of two bends per run. Open ends of conduit to be sealed to prevent moisture and foreign matter contamination.

8. **Grounding Electrode System**

   The grounding system shown represents the minimum requirements to achieve satisfactory grounding. Actual site conditions and soil resistivity levels will determine final grounding system design to comply with the following:

   A) All ground ring, ground rod and antenna structure connections to be ERICO® products, Inc. Calweld® exothermic type welded electrical connections or equivalent.
   B) Ground rods shall be driven to a depth below permanent moisture level (minimum depth shown) as dictated by geographical location.
   C) The antenna structure shall be connected to a grounding electrode system consisting of a number of interconnected ground rods. The system shall meet the requirements of the Underwriters' Laboratories Publication No. UL96A for Lightning protection.
   D) The grounding electrode system to earth resistance shall not exceed 10 Ohms, measured with a Biddle 3 terminal device or equivalent. The grounded conductor (neutral) supplied to all ac equipment on the antenna structure should be disconnected before taking measurement.
   E) Actual site conditions may require longer ground rods, additional ground rods and/or land fill additives to reduce soil resistivity levels.
   F) Avoid sharp bends when routing grounding wire, Grounding wires to antenna structure to be run as short and straight as possible.
   G) Final grade directly above grounding electrode system to be water permeable.

Foundations

9. Foundations have been designed to rest on undisturbed soil (per EIA-41 1-A and RS-222-D with a minimum allowable net vertical bearing capacity of 2000 psf. If undesirable soil conditions are encountered, the engineer shall be notified.

10. Backfill shall be suitable excavated material or other suitable material compacted in 6" [152] lifts to 90% of maximum density as determined by ASTM D1557.

11. This foundation is a typical design only. Certification of its suitability for a particular installation by a professional engineer is required prior to its use for actual fabrication.

12. If this foundation is to be located in an area where the annual frost penetration depth exceeds 15" [381], the local building code specifying a minimum required foundation depth should be consulted.

Concrete

13. Concrete and related work shall be mixed, placed and cured in accordance with the "Building Code Requirements for Reinforced Concrete" ACI 318 and "Specifications for Structural Concrete" ACI 301, publication SP-15.

14. Concrete shall develop compressive strength of at least 3000 psi [20 MPa] in 28 days with a maximum slump of 3" [76] at time of placing. Cement shall be normal Portland cement (Type 10) unless local soil conditions require the use of sulphate resistant cement.

15. Concrete subjected to freeze-thaw than cycles to be air entrained to 5% - 8%.

16. Reinforcing bars shall conform to ASTM A 615 [S1] grade 60 deformed type Fy = 60000 psi [400 MPa].

17. Unless otherwise noted, concrete cover for reinforcing bars shall conform to the minimum requirements of ACI 318.

18. Fabrication of reinforcing steel shall be in accordance with the "Manual of Standard Practice for Detailing Reinforced Concrete Structures" ACI 315.

19. Provide 3/4" x 45° [19 x 45°] chamfer on all exposed concrete edges.

20. A tolerance of ±1/8" [3] applies to all anchor bolt layout dimensions.

21. Level plates for struts individually and to within ±1/8" [3] of each other.

22. Level plate for antenna to within 0.1° of horizontal.

Antenna Geometry ES65PK-2

Basic dimensional characteristics and azimuth adjustment range capabilities are shown in Figure 4.

Figure 5 illustrates varying dimensions from ground reference of selected antenna points as the elevation angle changes from 0° to 90°.

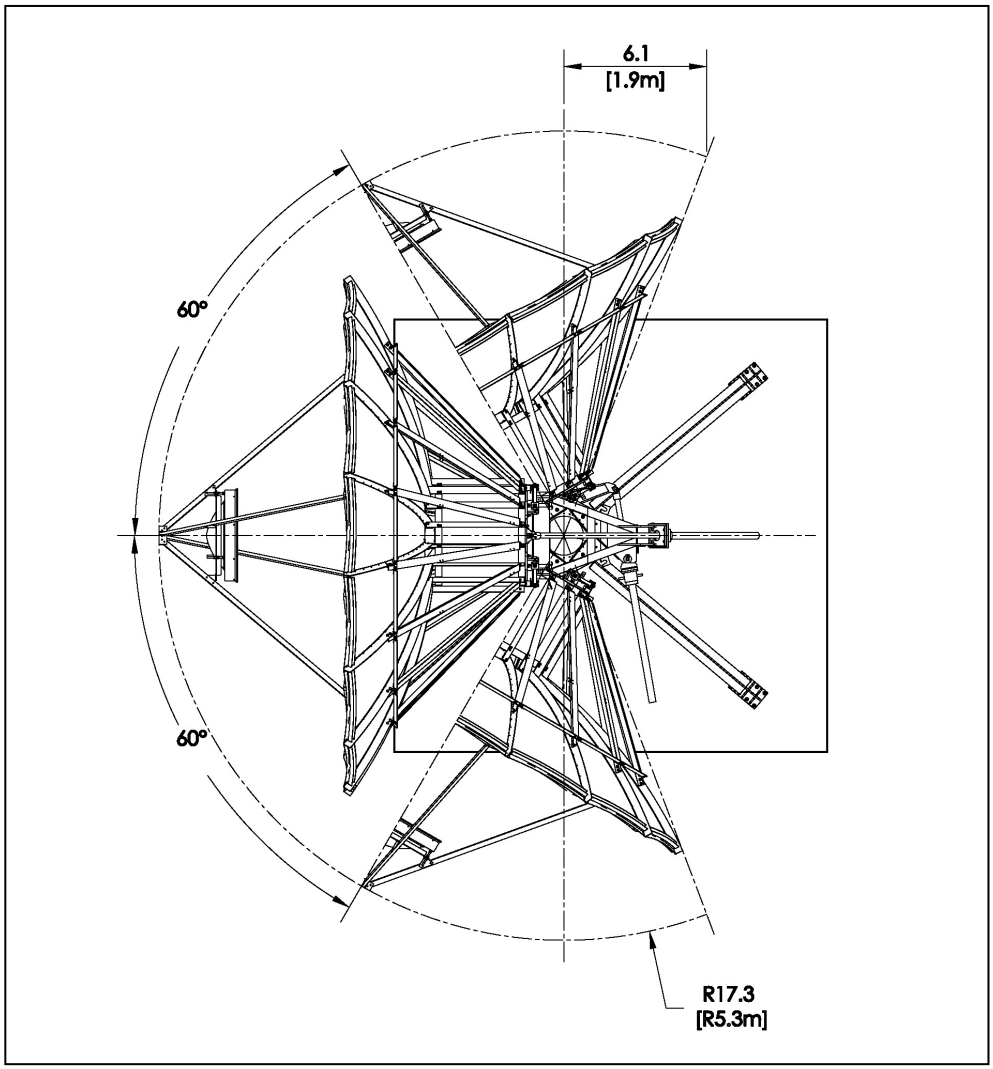

Figure 4

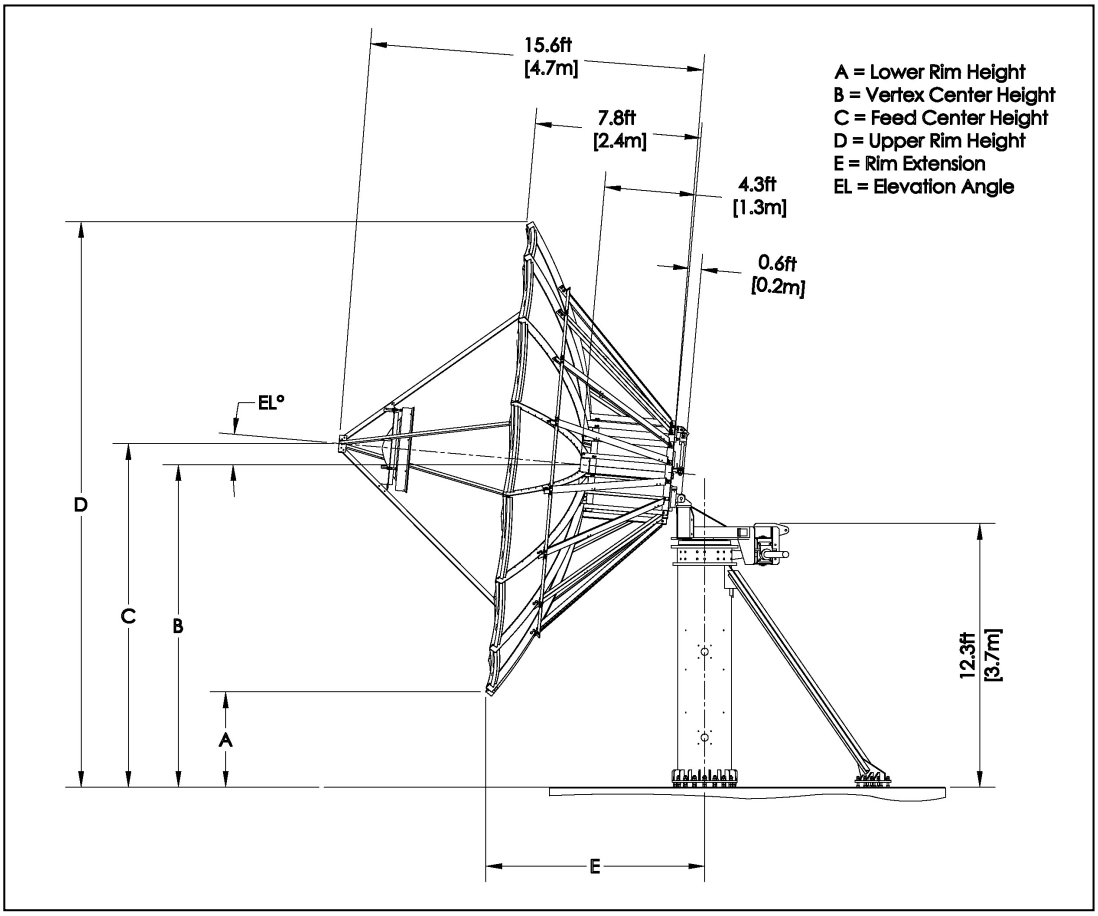
15.6ft
[4.7m]
7.8ft
[2.4m]
4.3ft
[1.3m]
0.6ft
[0.2m]
A = Lower Rim Height
B = Vertex Center Height
C = Feed Center Height
D = Upper Rim Height
E = Rim Extension
EL = Elevation Angle
EL°
D
C
B
A
E
12.3ft
[3.7m]

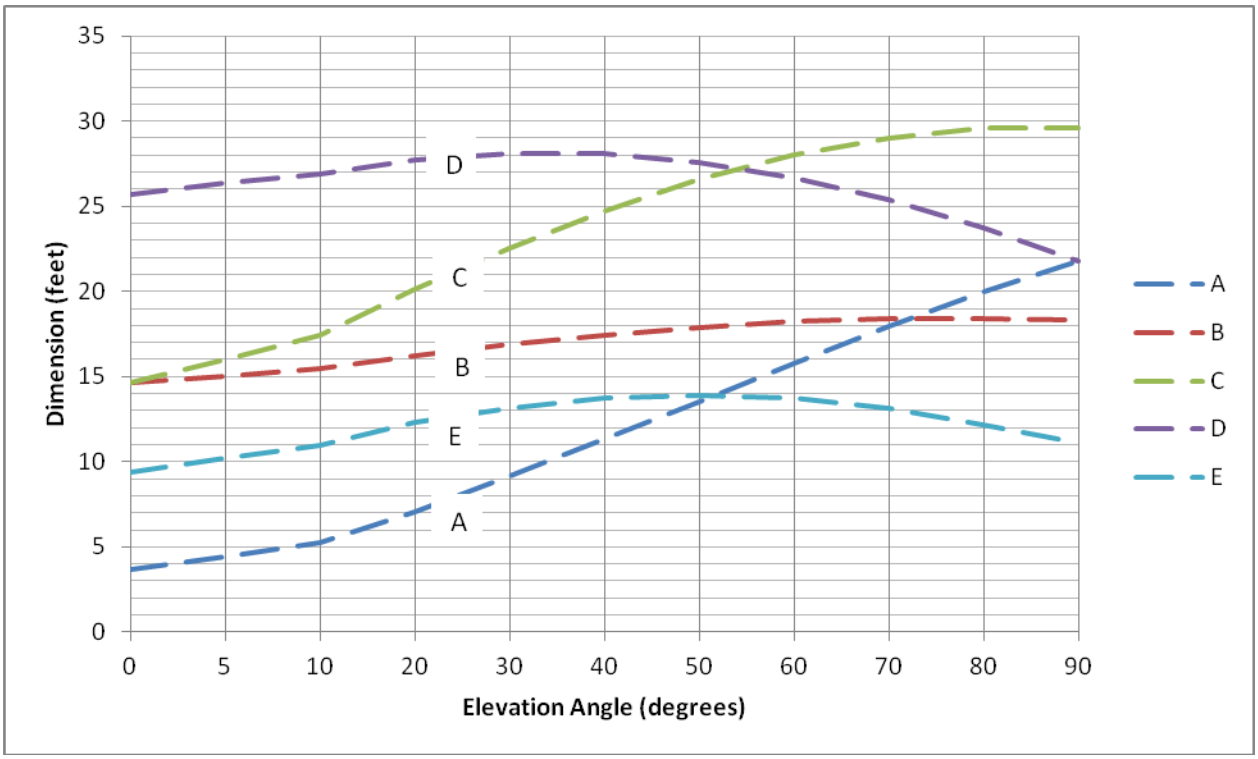
Dimension (feet)
Elevation Angle (degrees)
0
5
10
15
20
25
30
35
0
5
10
20
30
40
50
60
70
80
90
A
B
C
D
E

Figure 5

Antenna Geometry ES65PK-2-PF

Basic dimensional characteristics and azimuth adjustment range capabilities are shown in Figure 6.

Figure 7 illustrates varying dimensions from ground reference of selected antenna points as the elevation angle changes from 0° to 90°.

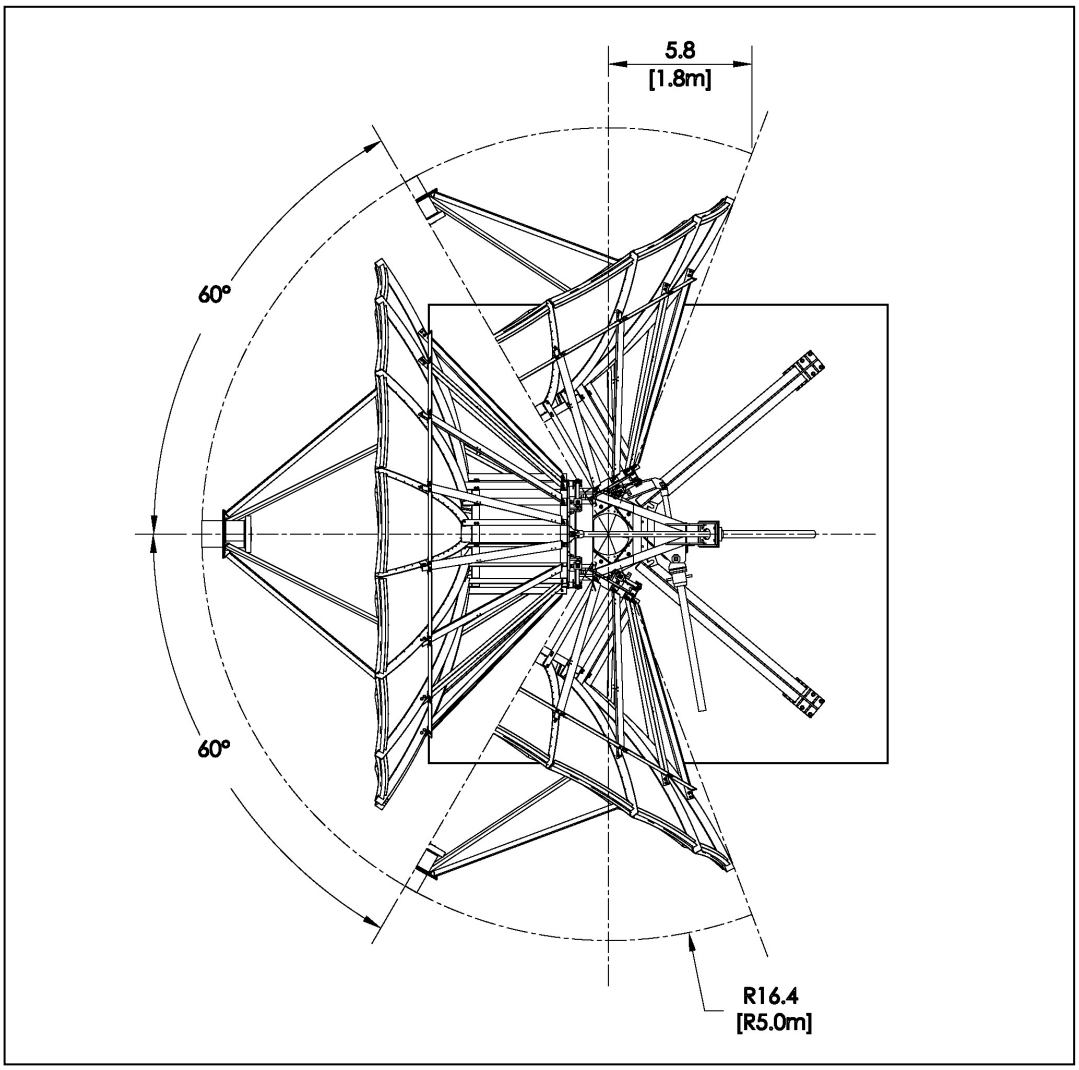

Figure 6

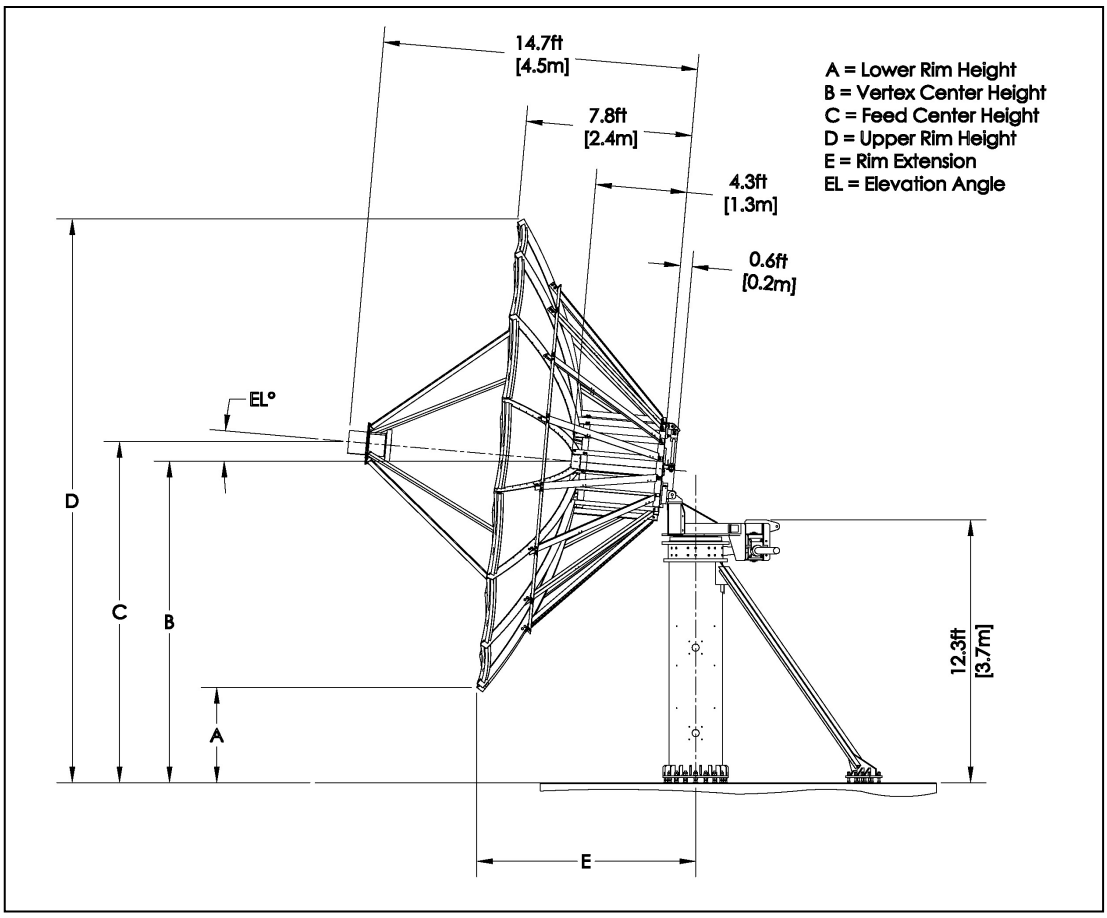
14.7ft
[4.5m]
7.8ft
[2.4m]
4.3ft
[1.3m]
0.6ft
[0.2m]
A = Lower Rim Height
B = Vertex Center Height
C = Feed Center Height
D = Upper Rim Height
E = Rim Extension
EL = Elevation Angle
EL°
D
C
B
A
E
12.3ft
[3.7m]

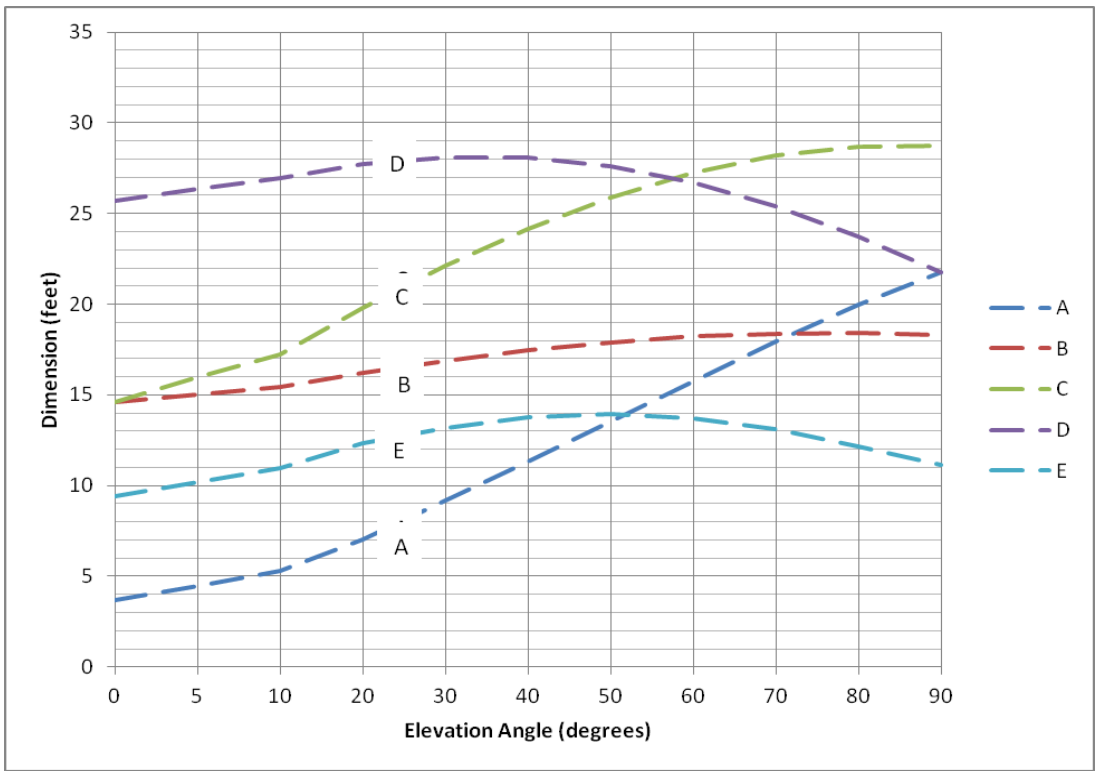
Dimension (feet)
Elevation Angle (degrees)
0
5
10
15
20
25
30
35
0
5
10
20
30
40
50
60
70
80
90
D
C
B
E
A
A
B
C
D
E

Figure 7