Installation, Operation and Maintenance

4.0 Meter Earth Station Antenna

Type ES40C-1, ES40K-1, ES40CM-1, and ES40KM-1

Copyright © 2023 Kratos Defense & Security Solutions Inc.

Bulletin OM40
Revision U
Nov 2023

Table of Contents

Introduction	3
Proprietary Data	4
Notice	4
Technical Assistance	4
Safety Symbols	5
Safety Summary	7
Recommended Tools	8
Tools and Hardware Conversion Chart	9
Parts Verification	10
Reporting Equipment Loss or Damage	10
Reporting Visible Loss or Damage	10
Reporting Concealed Damage	11
Inventory Equipment Received	11
Returning Equipment	11
A-325 Tensioning	12
Overview	13
Foundation Preparation	14
Manual Ground Mount Assembly, ES40C-1 or ES40K-1	15
ES40K-1 or ES40KM-1 Kuband Upgrade	21
Motorizable Ground Mount Installation ES40CM-1 or ES40KM-1	24
• Installation With a Crane	26
• Installation Without a Crane	28
Pedestal Assembly	31
Reflector Assembly	36
Enclosure Installation (Optional)	46
Reflector To Mount Assembly	46
• Manual Mount	46
• Motorizable Mount	48
Subreflector Strut Assembly	51
Calculations For Antenna Pointing	56
Pattern Optimization Procedure	57
Preventative Maintenance	60
Preservation Of Component and Aluminum Parts - Galvanized Surfaces	67
Stow Procedure for the 4.0M Antenna	67

DO NOT DISCARD CONTENTS

The product in this packaging was placed in the market after August 13, 2005. Its components must not be discarded with normal municipal or household waste. Contact your local waste disposal agency for recovery, recycling, or disposal instructions.

Copyright © 2023 Kratos Defense & Security Solutions Inc.

Introduction

Like all Kratos earth station antennas, the 4.0 meter earth station antenna provides high gain and exceptional pattern characteristics. The electrical performance and exceptional versatility provides the ability to configure the antenna with your choice of transmit/receive as well as receive-only, and for either linearly- or circularly-polarized C-band and Ku-band and linearly-polarized operation. A pedestal mount version is available for addition of motorization. The versatility is provided at the time of initial purchase, as well as in the future, as your satellite communications requirements evolve.

The segmented aluminum reflector panels are precision formed for accuracy and strength. The 6-piece reflector panel design ensures that the assembled reflector will maintain the extremely accurate surface contour and guaranteed performance without reflector alignment.

The motorizable pedestal features 180° of coarse azimuth coverage in three overlapping ranges and 90° coarse elevation adjustment. This large range of adjustment provides the ability to view geostationary satellites from horizon-to-horizon.

The motorizable pedestal mount features self-aligning bearings for the elevation pivots, resulting in “zero” backlash. This mount can be operated manually, but has the potential to be upgraded for motorized operation, including steptracking/Smartrack™ applications. The motorizable mount type is indicated by the ES40CM-1 or ES40KM-1 letters within the antenna type number. The azimuth/elevation jackscrews are equipped for integration with the optional motor drive systems.

A manual pedestal mount is also available for the ES40C-1 and ES40K-1 type antennas. It provides the same strong and versatile combination of mechanical features as the motorizable version; except that the elevation and azimuth axes are locking types, instead of bearing mounted types. This mount has been designed for manual applications only and cannot be upgraded to a motorizable mount.

The aluminum back structure and hot-dipped galvanized steel mount maintains pointing accuracy and ensures durability and reliability. The antenna and mount will survive 125 mph (200 km/h) wind, in any position of operation, without damage or permanent deformation.

Kratos provides a complete line of available options, including field-installable electrical anti-icing heaters, pressurization equipment and interconnecting HELIAX cables and waveguide.

Copyright © 2023 Kratos Defense & Security Solutions Inc.

Proprietary Data

The technical data contained herein is proprietary to Kratos Defense & Security Solutions, Inc. It is intended for use in installation, operation, and maintenance of Kratos equipment. This data shall not be disclosed or duplicated in whole or in part without express written consent Kratos Defense & Security Solutions, Inc.

©Kratos Defense & Security Solutions, Inc.

Notice

The installation, maintenance, or removal of antenna systems requires qualified, experienced personnel. Kratos installation instructions have been written for such personnel. Antenna systems should be inspected once a year by qualified personnel to verify proper installation, maintenance, and condition of equipment.

Kratos disclaims any liability or responsibility for the results of improper or unsafe installation practices.

All designs, specifications, and availabilities of products and services presented in this manual are subject to change without notice.

Technical Assistance

For technical assistance, contact Kratos Global Support.

Email: support@kratosdefense.com

Support Lines: US Toll Free: 888.409.9211 | Outside US: 719.472.3411

Kratos Antenna Solutions Corporation
3801 E. Plano Parkway Suite 200
Plano, TX 75074
USA
www.KratosDefense.com

Copyright © 2023 Kratos Defense & Security Solutions Inc.

Safety Symbols

The Antenna may have safety symbols on various system components. Be sure to use extreme caution when operating the antenna labeled with any of the following safety symbols:
Le système de l'antenne peut avoir symboles de sécurités sur plusieurs de ses composants. Il faut utiliser une extrême prudence lors de l'opêration su système étiqueté par n'importe quel symboles de sécurité suivants:

WARNING!
HAZARDOUS MOVING PARTS!
KEEP FINGERS AND OTHER BODY PARTS AWAY!

AVERTISSEMENT!
MOUVEMENT ALÉATOIRE DE PIÈCES!
LAISSER LES DOIGTS ET TOUTES AUTRES PARTIES DU CORPS HORS D'ATTEINTE!

WARNING!
RISK OF ELECTRIC SHOCK!

AVERTISSEMENT!
RISQUE D'ÉLECTROCUTION!

WARNING!
REFER TO MANUAL

AVERTISSEMENT!
SE REFERER AU MANUEL D'UTILISATION.

Copyright © 2023 Kratos Defense & Security Solutions Inc.

The following safety terms may appear on the product:
Les termes de sécurité suivants peuvant apparaître sur le produit:

DANGER - Indicates an injury hazard is immediately accessible as you read the marking and could result in loss of life.
DANGER—Signale, en ayant accès à ce marquage, un risque de blessure immédiat et qui peut être mortel.

WARNING - Indicates an injury hazard that is not immediately accessible as you read the marking and could result in loss of life.
AVERTISSEMENT—Signale, en ayant accès à ce marquage, un risque de blessure non immediat mais qui peut être mortel.

CAUTION - Indicates a hazard to property, including the product.
PRUDENCE—Indique un risque pour l'environ du produit, le produit inclus.

The following safety symbols and terms may be used in this manual
Les symboles et les termes suivants de sûreté peuvent être employés en ce manuel

WARNING! Warning statements identify conditions or practices that could result in injury or loss of life.

AVERTISSEMENT Les rapports d'avertissement identifient les conditions ou les pratiques qui pourraient avoir comme conséquence les dommages ou la perte de la vie.

RISK OF ELECTRIC SHOCK!

RISQUE DE DÉCHARGE ÉLECTRIQUE

Copyright © 2023 Kratos Defense & Security Solutions Inc.

Safety Summary

The following general safety precautions are not related to any specific procedures. Therefore, these precautions do not appear elsewhere in this manual. Personnel must understand and apply these precautions during all phases of operation and maintenance.

KEEP AWAY FROM LIVE CIRCUITS

Personnel must observe all applicable safety regulations at all times. Ensure power is disconnected/removed from unit before replacing components. Potential hazards may exist even though the power control switch is in the off position. Capacitors retain charges. Always remove power and use test equipment to confirm that a circuit is at ground potential before touching it. Never reach into or enter an enclosure to service or adjust the equipment until the absence of power is confirmed.

DO NOT SERVICE OR ADJUST ALONE

Under no circumstances should any person reach into the enclosure for the purpose of servicing or adjusting the equipment except in the presence of someone who is capable of rendering aid.

RESUSCITATION

Personnel working with or near high voltage should be familiar with modern methods of resuscitation. Such information may be obtained from local medical personnel.

ELECTROSTATIC DISCHARGE PRECAUTION

This equipment contains electrostatic discharge (ESD) sensitive devices. ESD sensitive equipment handling methods and materials must be used to prevent equipment damage during handling and servicing.

ESSENTIAL HEALTH AND SAFETY REQUIREMENTS

Refer to document P/N 240117–Essential Health and Safety Requirements.

Copyright © 2023 Kratos Defense & Security Solutions Inc.

Recommended Tools – ES40CM-1 or ES40KM1

Kratos supplies all appropriate hardware/parts required for the installation of your 4.0 Meter Earth Station Antenna. All tools necessary for the installation process should be provided by the installation crew. Kratos recommends that the following tools be used for a proper installation of the Earth Station Antenna.

Table 1

Tool	Description	Quantity
Open End Wrench	1-1/4”	1 ea
	¼” ● 5/8” ● 9/16” ● 7/8” 1-1/16” ● 1-1/4” ● 13mm 3/8” ● ½” ● 1-1/8” ● 1.5” 15/16” ● 2-1/4” ● 1” 1-5/16” ● 27/32” ● 3/4” ●7/8	2 ea
Drive Sockets	9/16” ● ¾” ● 7/8” ●1-1/16” ●1/1/4” ● 13mm ● 9/16”	1 ea
	7/16” ● 1”	2 ea
Spud Wrench	Standard	1 ea
Breaker Bar	1/2”	1 ea
Screw Driver	Standard and Phillips	1 ea
Allen Wrench	1/2“ ● 5mm	1 ea
Tape Measure	Standard	1 ea
Hammer	Standard	1 ea
Rubber Mallet	Standard	1 ea
Pry Bar	Standard	1 ea
Tin Snips	Standard	1 ea
Crane	1 Ton Minimum Capacity	1 ea
Rope/Cord, 2000 lb breaking strength	50 ft	1 ea
Shackles	5/8”	2 ea
Ladder	10 Foot Extension	1 ea
Nylon Web Sling	3” x 3’	2 ea
Felt-tip Marker	Standard	1 ea

Copyright © 2023 Kratos Defense & Security Solutions Inc.

Tool and Hardware Conversion Chart

Bolts and Wrenches Chart, Possible US to Metric Substitution During 4.0 Meter ESA Installation**

			Bolt				Open Wrench	Metric Bolt (Gr 8.8 DIN 933)			Open Wrench
Location	BOM	Item No.	Base Diam.	Length	Qty.	Material	inches	Base Diam.	Standard Length	Material	millimeters
Sub	2	7	3/8-16	1.5	8	SS	9/16	M10 x 1.5	40	#933 A4	17
Reflector	2	8	3/8-16	1.125	4	SS	9/16	M10 x 1.5	30	#933 A4	17
	2	12	3/8-16	6	3	SS	9/16	M10 x 1.5	120	#933 A2	17
Reflector	3	111	5/16-18	1.25	40	SS	1/2	M8 x 1.25	30	#933 A4	13
	3	117	3/8-16	1.5	15	SS	9/16	M10 x 1.5	40	#933 A4	17
	3	121	1/4-20	1.25	24	SS	1/8	M6 x 1	30	#933 A4	10
	3	125	M6	1	250	SS	5 mm Allen	M6	25	Hot dip Glv	5mm Allen
	3	126	3/8 SHLDR	0.75	15	SS	9/16	SHLDR M10/M8 x 1.25 20 mm SHLDR Length, 13 mm THRD Length	20	SO 7379, I12.9 CLASS	5mm Allen
Mount	3	101	3/4-10	2	40	G	1 1/8	M20 x 2.5	50	Hot Dip Glv	30
	3	107	1-8	5	1	G	1 1/2	M24 x 3	130	Hot Dip Glv	36
	3	108	1-8	2.5	2	G	1 1/2	M24 x 3	65	Hot Dip Glv	36
	3	111	5/8-11	2.25	4	SS	15/16	M18 x 2.5	60	Hot Dip Glv	27
	3	115	3/4-10	10	1	SS	1 1/8	M20 x 2.5	180	#933 A2	30
	3	120	Rod End	3/4"	2	-		Rod end M20 x 1.5, 20mm ball / Articulated rod ends #648 "K" K20MR	47	Hot Dip Glv	-
	3	123	3/4-10	5	4	g	1 1/8	M20 x 2.5	130	Hot Dip Glv	30G

Copyright © 2023 Kratos Defense & Security Solutions Inc.

Nuts and Wrenches Chart, Possible US to Metric Substitution During 4.0 Meter ESA Installation**

			Nut				Open Wrench	Nuts (Gr 8.8 DIN 933)		Open Wrench
Location	BOM	Item No.	Base Diam.	Length	Qty.	Material	inches	Base Diam.	Material	millimeters
Sub	2	6	3/8-16		28	ss	9/16	M10 x 1.5	#934 A4	17
Reflector	2	13	3/8-16	thin	9	ss	9/16	M10 x 1.5	#439 B-A4	17
	2	15	3/8-16		6	ss	9/16	M10 x 1.5	#934 A4	17
Reflector	3	114	5/16-18		60	ss	1/2	M8 x 1.25	#934 A4	8
	3	116	M6	1	250	ss	13mm	M6	Hot Dip Glv	13
	3	120	3/8-16		15	ss	9/16	M10 x 1.5	#934 A4	17
	3	124	1/4-20		24	ss	7/16	M6 X 1	#934 A4	10
	3	102	1 1/2-6		4	ss	2 1/4	M36 x 4*	#934 A4	55
	3	105	3/4-10		35	g	1	M20 x 2.5	Hot Dip Glv	30
	3	109	1-8		10	g	1 5/16	M24 x 3	Hot Dip Glv	36
Mount	3	114	5/8-11		8	ss	27/32	M18 x 2.5	#934 A4	27
	3	121	1 1/2-6	drilled	1	g	2 1/4	M36 x 4*	Hot Dip Glv	55
	3	124	3/4-16	thin	3	g	1	M20 x 2.5	#439 B-A2	30

For Reference only. ** - Lock and Flat washers choose according to specified Bolts & Nuts size

Parts Verification

Upon receipt of your order, the shipment should be verified to ensure that all parts have reached your site. This process should occur before the installation process begins. Kratos thoroughly inspects and carefully packs all equipment before shipment. If you find that there are missing components, please refer to step-by-step instructions on how to properly report the equipment loss. When you have received your order, verify that all parts contained in the shipment correspond to the parts listed on your packing list.

Reporting Equipment Loss or damage

If you find that the equipment was damaged during the shipping process, you should file a claim with the carrier. Follow the “Reporting Visible Loss or Damage” or “Reporting Concealed Damage” procedures when filing a claim with a carrier.

Reporting Visible Loss or Damage

Make a note of any loss or evidence of external damage on the freight bill or receipt, and have it signed by the carrier’s agent. Failure to adequately describe such external evidence of loss or damage may result in the carrier refusing to honor a damage claim. The form required to file such a claim will be supplied by the carrier.

Copyright © 2023 Kratos Defense & Security Solutions Inc.

Reporting Concealed Damage

Concealed damage means damage which does not become apparent until the unit has been unpacked. The contents may be damaged in transit due to rough handling, even though the carton may not show external damage. If you discover damage after unpacking the unit, make a written request for an inspection by the carrier's agent, then file a claim with the carrier since such damage is most likely the carrier's responsibility.

Inventory Equipment Received

After opening your shipment, you should take inventory of the parts immediately. Check each item received in you shipment against the packing slip included with the shipment. If any items are missing, please notify Kratos Antenna Solutions Corporation immediately by contacting the Customer Service Center.

Returning Equipment

Kratos Antenna Solutions Corporation tries to ensure that all items arrive safe and in working order. Occasionally, despite these efforts, equipment is received that is not in proper working condition. When this occurs, and it is necessary to return the equipment to Kratos Antenna Solutions Corporation for either repair or replacement, return can be expedited by using the following procedure:

Step 1 — Call the Kratos Customer Service Center and request a Return Material Authorization (RM) number, as well as the address to which you should forward the material(s).

Step 2 — Tag or identify the defective equipment, noting the defect or circumstances. Also, be sure to write the RM number on the outside of the carton. It would be helpful to reference the Kratos sales order and purchase order number, as well as the date the equipment was received.

Step 3 — Pack the equipment in the original container with protective packing material. If the original container and packing material are no longer available, pack the equipment in a sturdy corrugated box and cushion it with appropriate packing material.

Step 4 — Be sure to include the following information when returning the equipment:

- Your Company Name
- Your Company Address City, State and Zip Code
- Telephone Number
- RM Number
- Problem Description
- Contact Name

Note: Absence of the RM number will cause a delay in processing your equipment for repair. Be sure to include the RM number on all correspondence.

Step 5 — Ship the equipment to Kratos using UPS, U.S. Postal Service, or other appropriate carrier, freight prepaid and insured. The material should be forwarded to the address given by the Kratos Customer Service Center contact.

Copyright © 2023 Kratos Defense & Security Solutions Inc.

A-325 Tensioning

During the installation process there are several references to the A-325 hardware tensioning procedure. The A-325 hardware must be properly tensioned to avoid slippage between bolted surfaces under high loads. Slippage can cause the corresponding assembly to move, causing antenna misalignment. When designated, the A-325 hardware should be tightened according to the following tensioning procedure.

Note: Tensioned bolts are for final connections only and should not be loosened for reuse.

Step 1 — Lubricate the bolt threads with the provided stick wax to reduce friction.

Step 2 — Insert the bolt, and add a flat washer - if required. Do not allow wax under the flat washer.

Step 3 — Add the nut and finger-tighten.

Step 4 — After the connections are complete, tighten the bolts until the surfaces are joined and the nuts are snug.

***Snug tight is defined as the tightness that exists when the plies of the joint are in firm contact. This may be obtained by a few impacts of an impact wrench or the full effort of a man using an ordinary spud wrench.**

Do not proceed with a felt tip marker or tightening unless the connection is final and is not intended to be loosened again.

Note: If the bolts are loosened after discard and replace with new hardware.

Step 5 — Using a felt-tip marker, mark the nuts and the ends of the bolts with a straight line as shown in Figure 2a and 2b.

Step 6 — Tighten the nuts further with an extra-long wrench until the nuts are moved 1/3 turn (120 degrees) as shown in Figure a for bolt lengths shorter than four diameters and 1/2 turn (180 degrees) as shown in Figure 2-B for bolt lengths longer than four diameters.

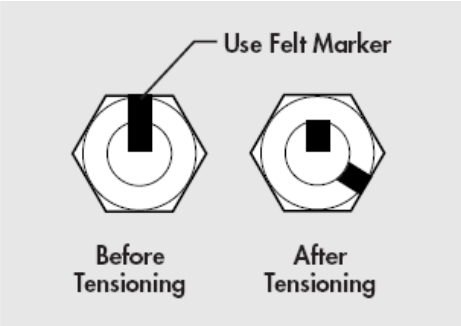

Figure 2a. A-325 Tensioning

For Bolts Shorter Than 4 Diameters

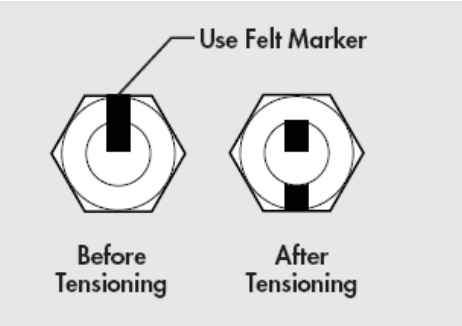

Figure 2b. A-325 Tensioning

For Bolts Longer Than 4 Diameters

Note* Do not perform A-325 tensioning procedure during assembly process unless specifically designated by installation instructions. Final tightening will occur after mount is fully assembled.

Copyright © 2023 Kratos Defense & Security Solutions Inc.

Note*Hand Tighten is defined as tightness without force, and is not part of the ASTM A325 tensioning procedure.

Overview

The 4.0 Meter Earth Station Antenna requires the installation team to perform the assembly in the sequence presented. Moreover, this sequence should be reviewed beforehand to ensure a smooth installation. Throughout the sequence, certain part numbers will be used. Those part numbers describe the antenna currently being installed.

The ES40C-1 and ES40K-1 are transmit/receive 4.0 Meter ESA with a manual pedestal mount.

The ES40CM-1 and ES40KM-1 are transmit/receive 4.0 Meter ESA with a motorizable pedestal mount.

Note: All installation instructions for the antenna options are contained in the parts kit included in the shipment.

Copyright © 2023 Kratos Defense & Security Solutions Inc.

Foundation Preparation

Refer to Foundation Specifications for guidance in preparing the location and the installation of all 4.0 number type Meter Earth Station Antenna foundations.

Before beginning the installation process on the ground mount assembly, ensure that the foundation has been prepared. Foundation specifications are provided by Kratos and may be used as a reference by civil engineering personnel when preparing the foundation for local soil conditions. These specifications are available before the shipment arrives by contacting the Kratos Technical Assistance.

To ensure level, smooth surface for mount, remove excess concrete from shear caps and anchor bolts as shown in Figure 1. Sweep foundation clean of any debris.

Figure 1

Copyright © 2023 Kratos Defense & Security Solutions Inc.

Manual Ground Mount Assembly (ES40C-1 or ES40K-1)

As stated earlier, Kratos recommends the use of a crane during this installation process; however, we recognize that a crane may not always be available. If a crane is not available you can use Kratos Manual Lifting Kit or similar options

The elevation/azimuth low cost manual mount design simplifies installation, minimizes foundation requirements, and enables horizon-to-horizon coverage from any worldwide location. The ground mount assembly enables 180 degree positioning for selected azimuth viewing. Azimuth range coverage is plus or minus 90 degrees, divided into three 120 degree continuous ranges with a 20 degree overlap. Elevation adjustment is continuous from 0 degrees to 90 degrees.

Pipe pedestal similar to Kratos (P/N PEDMNT-4) should be previously installed or purchased from Kratos. After ensuring that the foundation has been properly prepared, anchor bolts and pipe pedestal correctly installed the ground mount assembly process may begin.

The manual mount parts arrive in a packaged wooden crate. The mount can be positioned manually or by using a crane; however, Kratos recommends that this procedure be performed using a crane to ensure speed and ease of installation.

Step 1 — Carefully remove the manual mount parts from the packing crate.

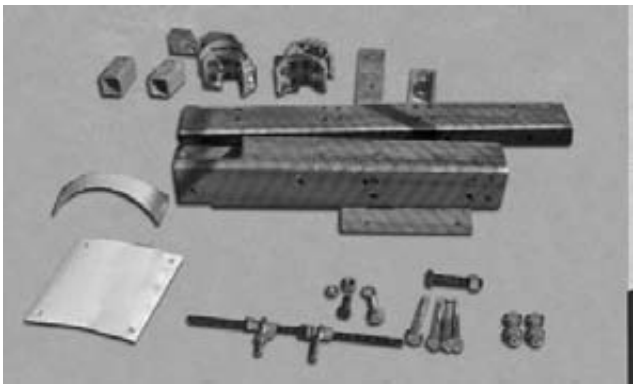

Figure 2

Figure 3

Copyright © 2023 Kratos Defense & Security Solutions Inc.

Manual Ground Mount Assembly (ES40C-1 or ES40K-1) continued

Step 2 — Tighten the foundation hardware using the A-325 tensioning procedure.

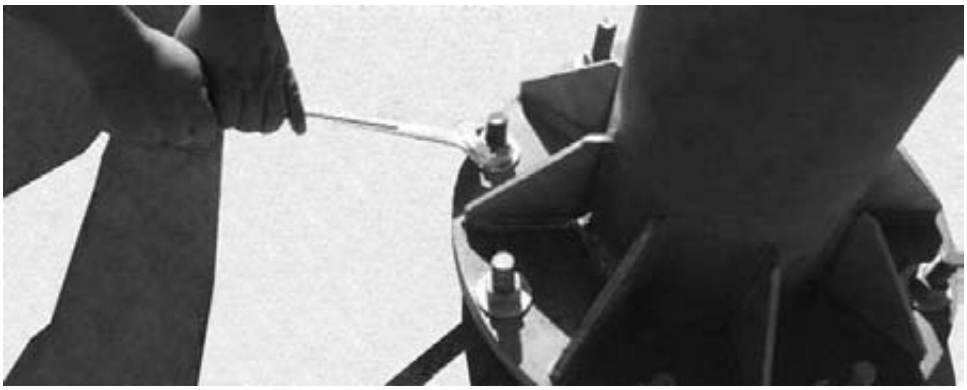

Figure 4

Step 3 — Prepare the ground mount hardware in the mount hardware kit by sorting all bolts, nuts, and flat washers into separate sections as shown in Figure 5.

Figure 5

Figure 6

Step 4 — Wax two sides of each galvanized bolt with the stick wax provided. This allows a smooth installation of each galvanized bolt as shown in Figure 6.

Step 5 — Set Azimuth Tube Weldment (P/N 7542711) on the ground near the pedestal. Put (P/N 7542635) bearing pad on top of it, line up the bolt holes with the slots, place Tube Weldment (P/N 7545086) on top of the pad secure it with (4) x 5/8-11 hardware. Snug tighten the bolts.

Copyright © 2023 Kratos Defense & Security Solutions Inc.

Manual Ground Mount Assembly (ES40C-1 or ES40K-1) continued

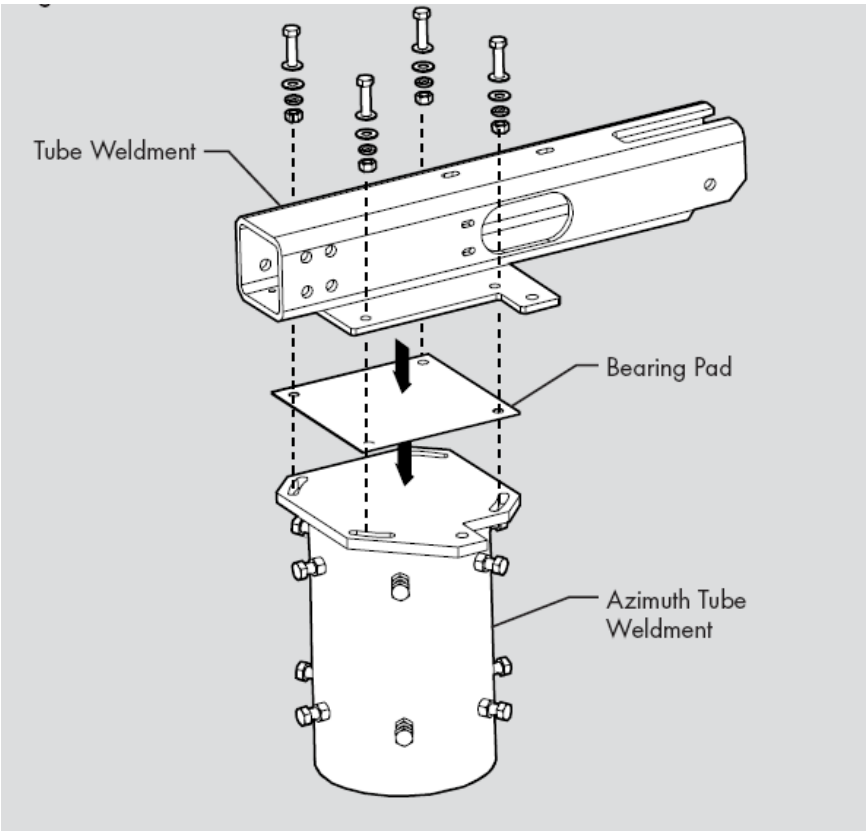

Figure 7

Step 6 — Install Two Universal Brackets (P/N 7542460) using (8) x 3/4-10 hardware. Tighten bolts per ASTM A325 procedures.

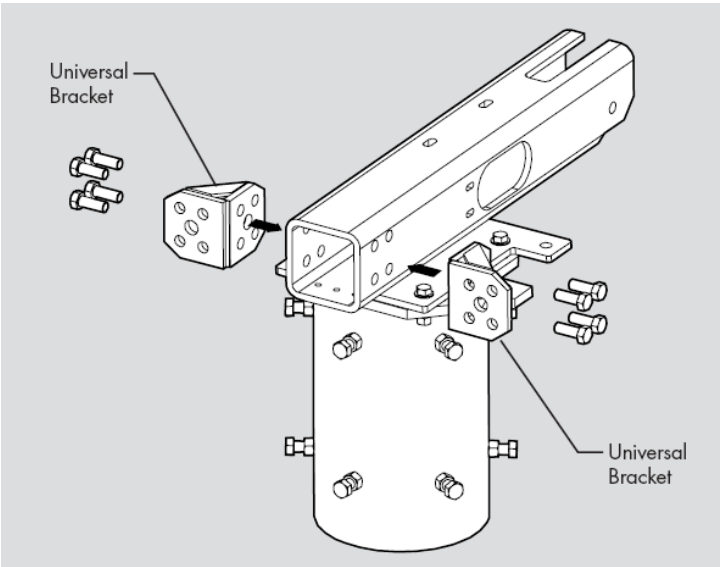

Figure 8

Copyright © 2023 Kratos Defense & Security Solutions Inc.

Manual Ground Mount Assembly (ES40C-1 or ES40K-1) continued

Note: Insure that frontal faces of the universal brackets and tube weldment are in plane and leveled.

Figure 9

Figure 10

Step 7 — Install Reflector Support Tube (P/N 7542474) to the previous installed universal brackets using front access slots and (8) x ¾-10 hardware. Tighten bolts per ASTM A325 procedures.

Figure 11

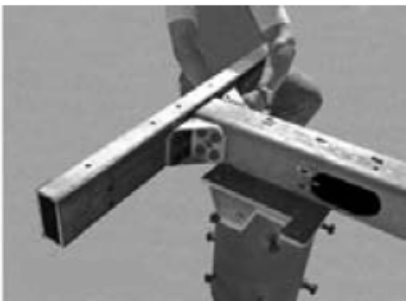

Figure 12

Copyright © 2023 Kratos Defense & Security Solutions Inc.

Manual Ground Mount Assembly (ES40C-1 or ES40K-1) continued

Step 8 — Install Two Universal Brackets (P/N 7542460) using (8) x ¾-10 hardware. Tighten bolts per ASTM A325 procedures.

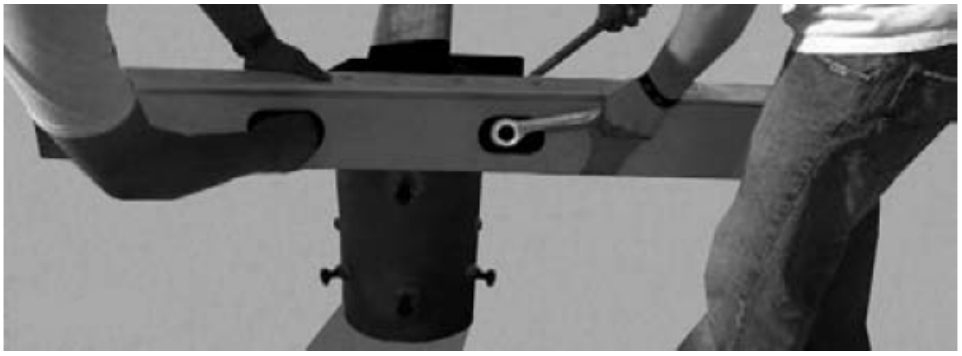

Figure 13

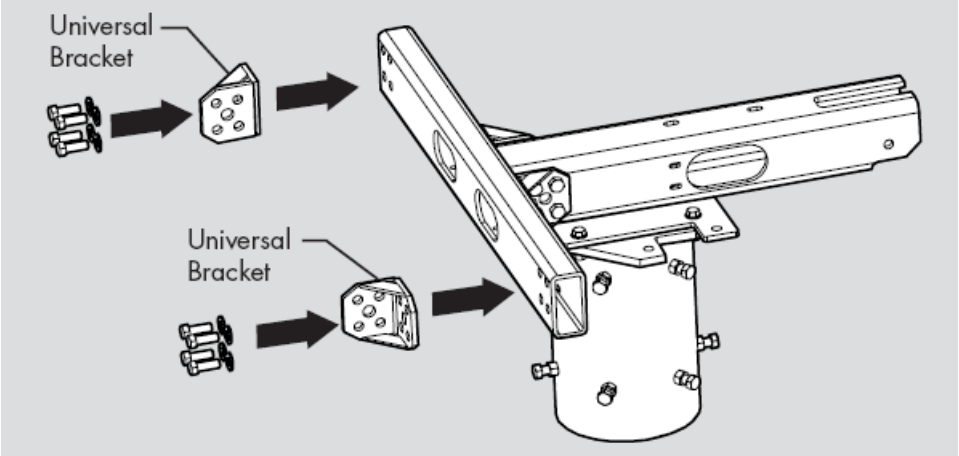

Figure 14

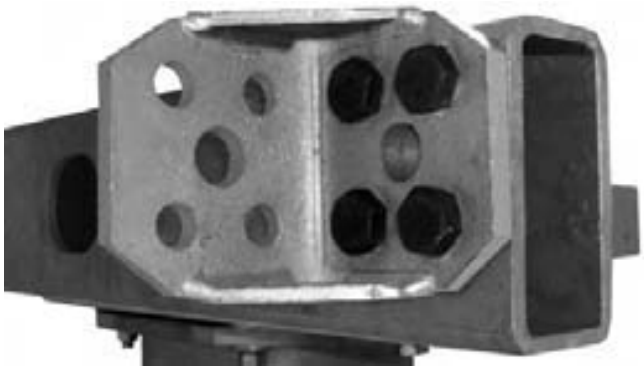

Figure 15 Detail View of Installed Universal Bracket

Step 9 — Install fine azimuth adjustment rod using two spherical rod ends (P/N 7542639) and 3/4-16 nuts. Level the rod using 3/4-16 adjustments nuts. Hand tighten the hardware.

Copyright © 2023 Kratos Defense & Security Solutions Inc.

Manual Ground Mount Assembly (ES40C-1 or ES40K-1) continued

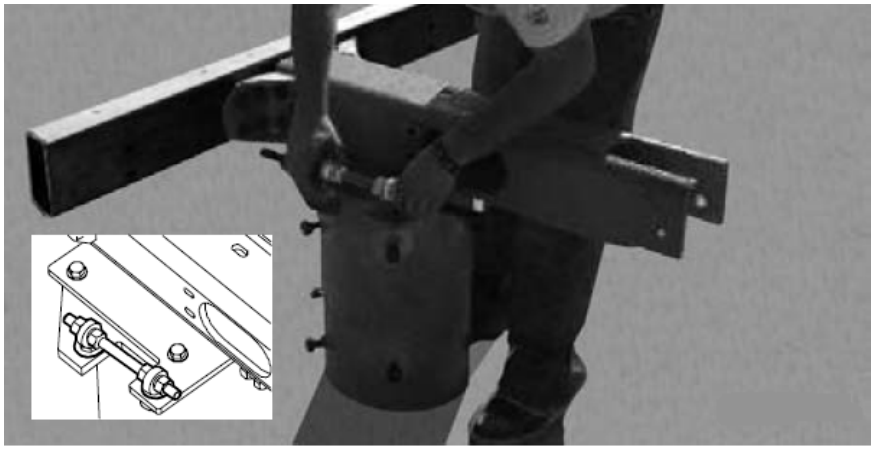

Figure 16

Figure 17

Step 10 — Install Elevation Pivot Bracket (P/N 7542693) using 3/4-10 hardware. Hand tighten hardware.

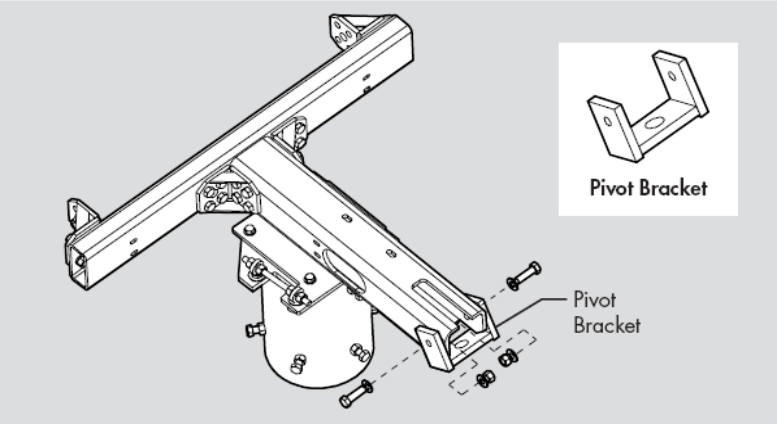

Figure 18

Step 11 — Install mount assembly onto the Flange Pipe Mount P/N PEDMNT-4 or customer supplied Pipe Mount at this time.

Copyright © 2023 Kratos Defense & Security Solutions Inc.

ES40K-1 or ES40KM-1 Ku-Band Upgrade

Follow the Steps below for Ku-Band Upgrade assembly. Drawing 40CK-UPG-1

1. ATTACH 7546958 TO THE UNDERSIDE OF THE PANNING FRAME AS INDICATED IN DETAIL C, NO NUTS ARE REQUIRED
2. ATTACH THE OTHER SIDE OF THE ANGLE USING HARDWARE INDICATED IN DETAIL A
3. ATTACH THE STIFFENERS (7546957 2 PLACES) AS INDICATED IN THE TOP VIEW
4. SECURE THE BOTTOM FLANGE OF THE STIFFENERS AS INDICATED IN DETAIL D

KIT CONTAINS SPARE HARDWARE

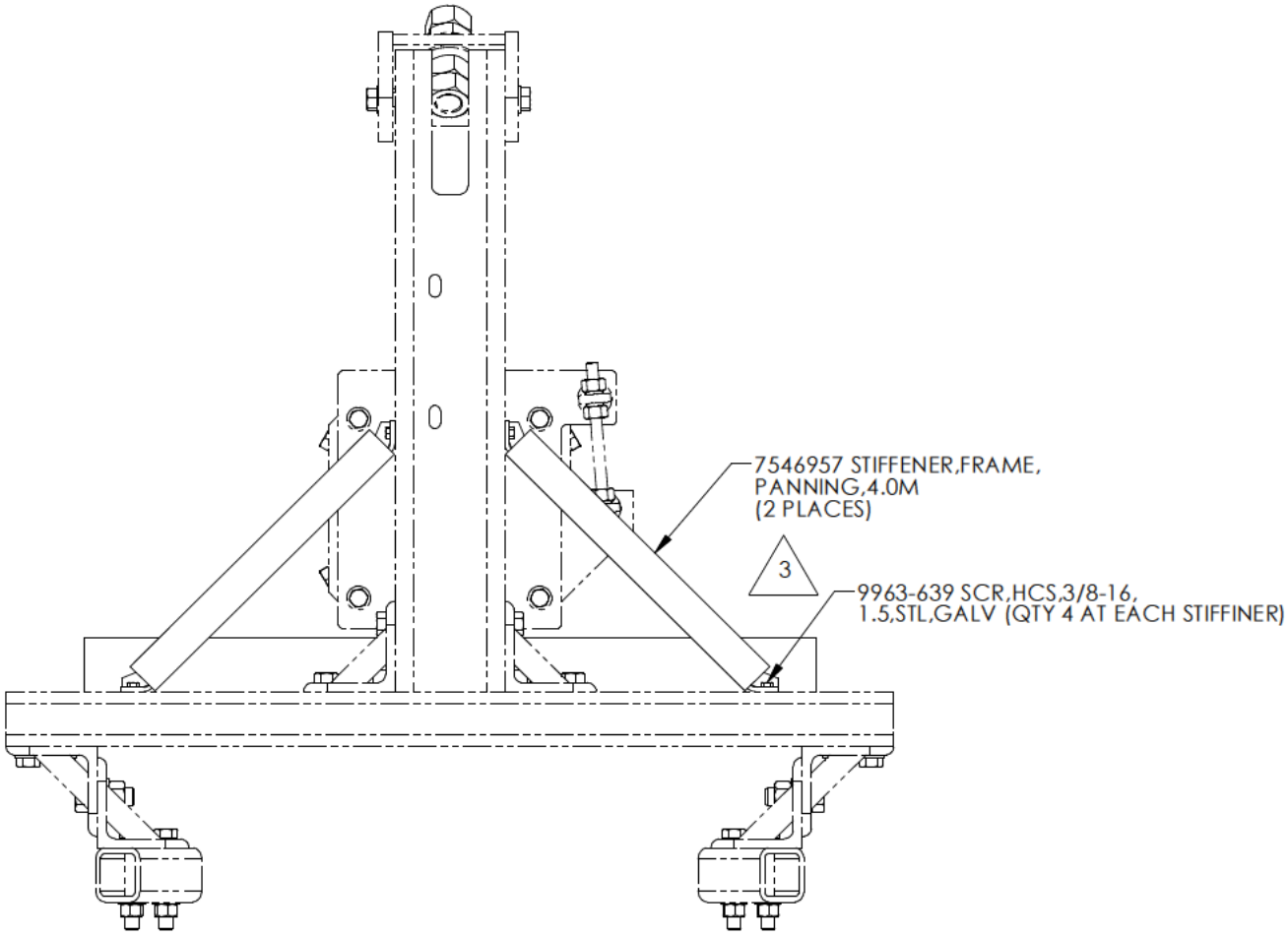

Copyright © 2023 Kratos Defense & Security Solutions Inc.

ES40K-1 or ES40KM-1 Ku-Band Upgrade continued

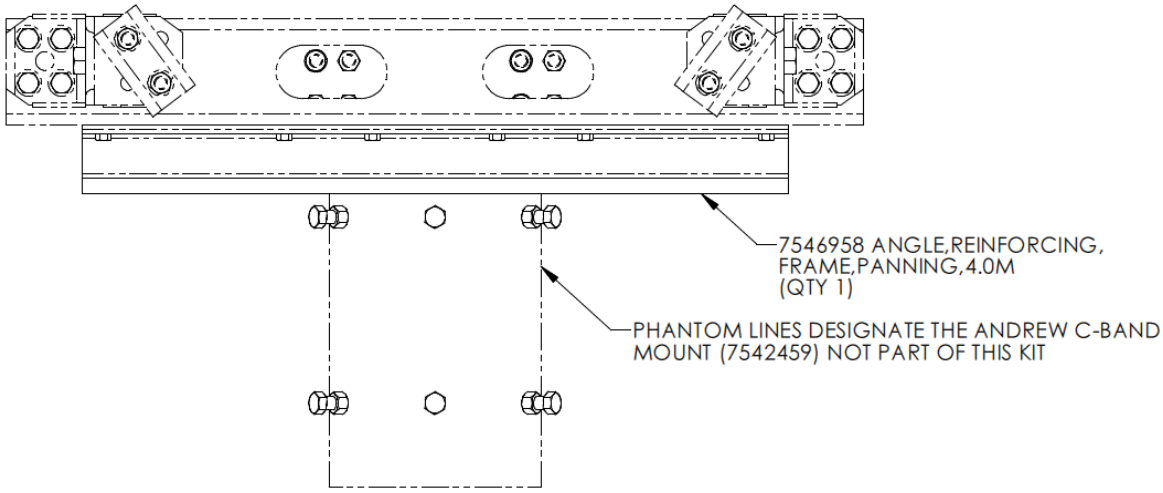

FRONT VIEW OF EXISTING C-BAND MOUNT
(ELEVATION STRUT REMOVED FOR CLARITY)

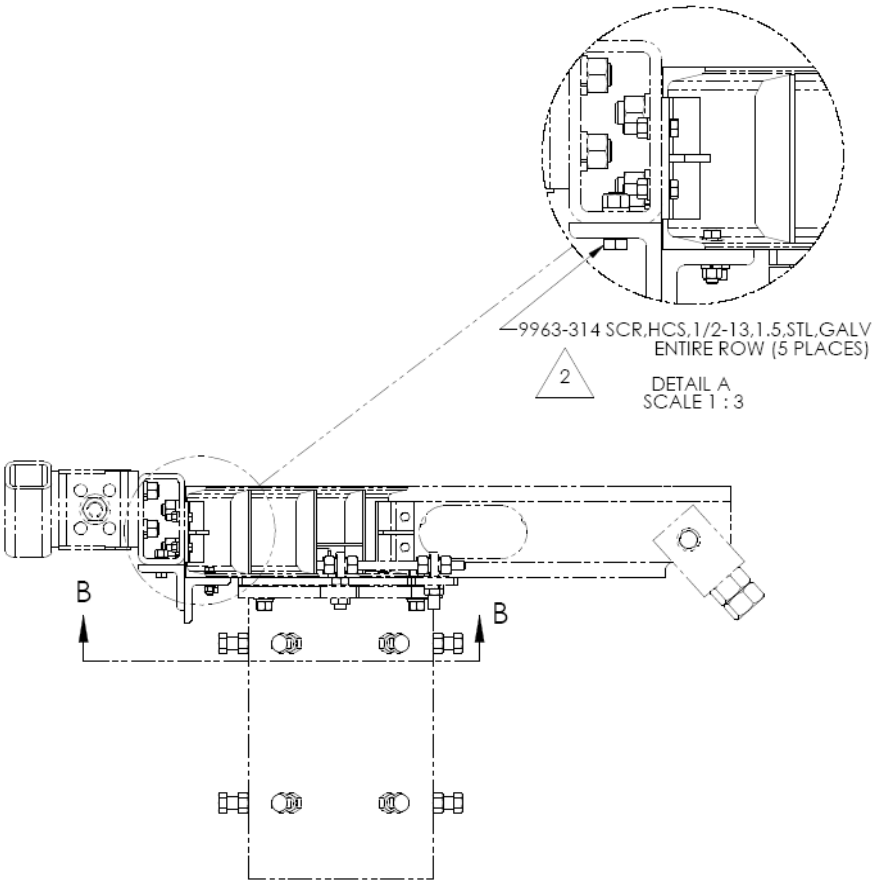

Copyright © 2023 Kratos Defense & Security Solutions Inc.

ES40K-1 or ES40KM-1 Ku-Band Upgrade continued

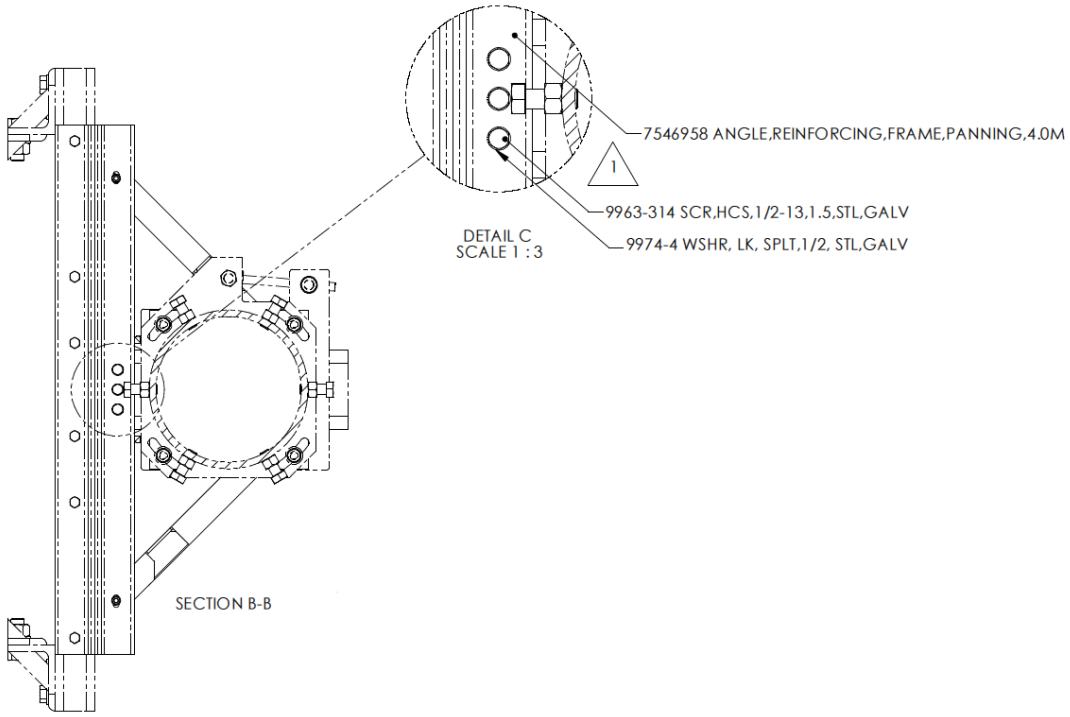

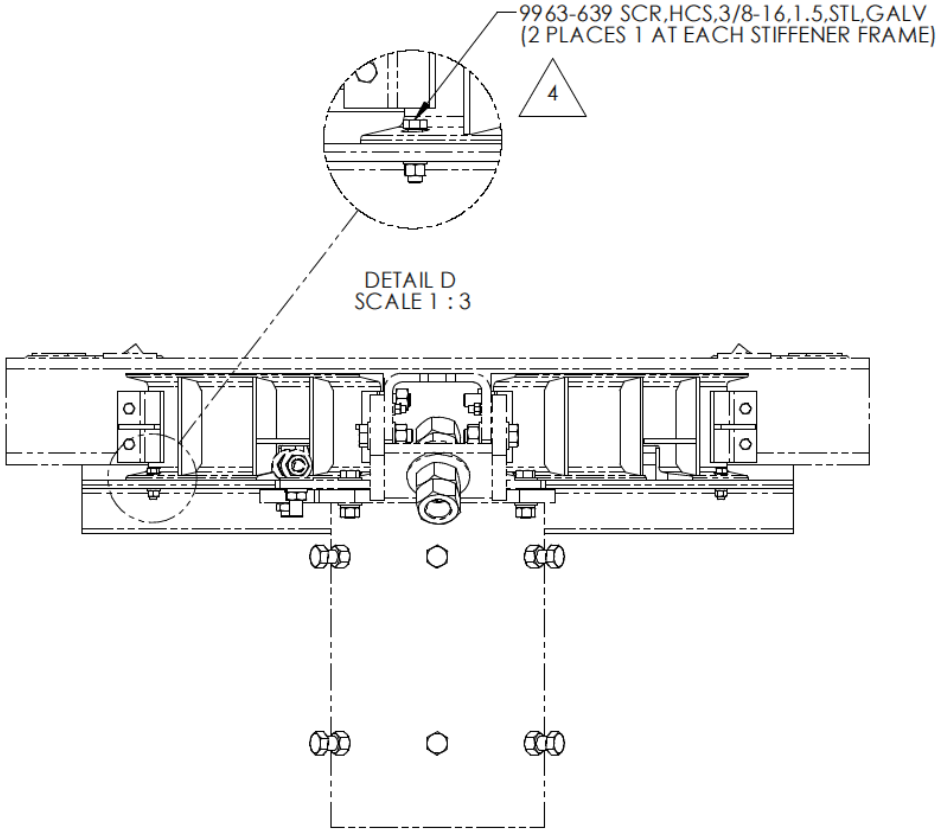

Copyright © 2023 Kratos Defense & Security Solutions Inc.

Motorizable Ground Mount Assembly (ES40CM-1 or ES40KM-1)

The pedestal ground mount assembly P/N 208800, arrives in a packaged wooden crate as shown in Figure 19 below. The mount can be positioned manually or by using a crane; however, Kratos recommends that this procedure be performed using a crane to ensure speed and ease of installation.

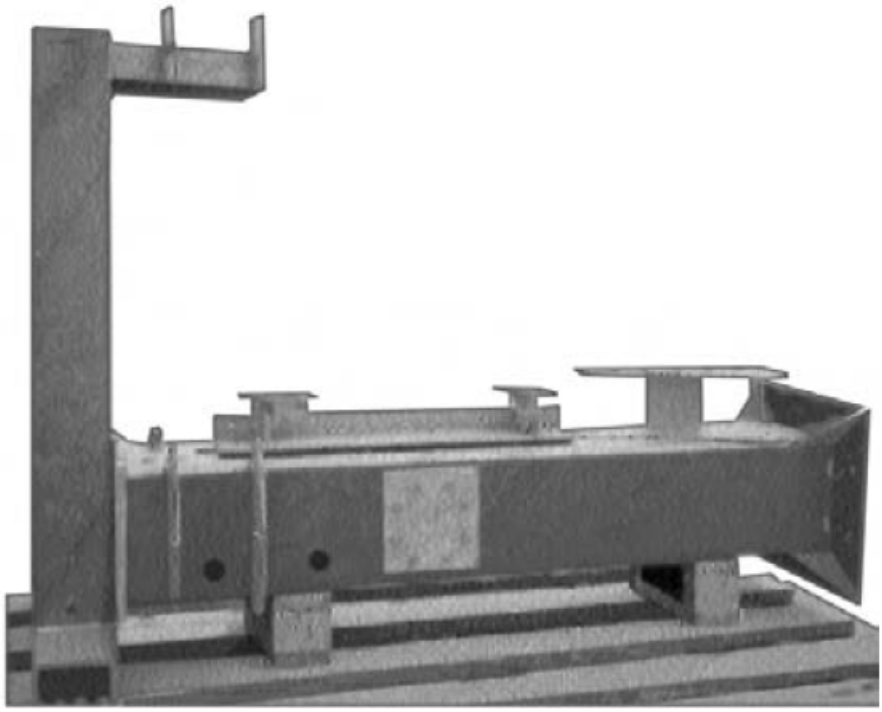

Figure 19

Step 1 — Prepare the ground mount hardware in the mount hardware kit by sorting all bolts, nuts, and flat washers into separate sections as shown in Figure 20.

Figure 20

Copyright © 2023 Kratos Defense & Security Solutions Inc.

Motorizable Ground Mount Assy (ES40CM-1 or ES40KM-1) continued

Step 2 — Wax two sides of each galvanized bolt with the stick wax provided. This allows a smooth installation of each galvanized bolt as shown in Figure 21.

Figure 21

The elevation/azimuth mount design simplifies installation, minimizes foundation requirements, and enables horizon-to-horizon coverage from any worldwide location. The ground mount assembly enables 180 degree positioning for selected azimuth viewing. Azimuth range coverage is plus or minus 90 degrees, divided into three 120 degree continuous ranges with a 30 degree overlap. Elevation adjustment is continuous from 0 degrees to 90 degrees.

Copyright © 2023 Kratos Defense & Security Solutions Inc.

Motorizable Ground Mount Assy (ES40CM-1 or ES40KM-1) continued

Installation Using a Crane

As stated previously, the pedestal ground mount installation process can be conducted manually or by using a crane. The following steps provide the necessary procedures for installing the ground mount assembly using a crane.

Step 1 — Carefully remove the ground mount assembly (P/N 208800 - motorizable or P/N 202680-2 manual) from the packing crate. Leave the steel strapping intact to avoid disengagement of the panning frame from the square-tube weldment during the ground mount installation.

Step 2 — Securely attach the crane to the ground mount assembly using a sling, and carefully raise the entire ground mount as shown in Figure 22.

Figure 22

Step 3 — Align the ground mount assembly directly over the anchor bolts, which should have been previously mounted in the foundation pad.

Copyright © 2023 Kratos Defense & Security Solutions Inc.

Motorizable Ground Mount Assy (ES40CM-1 or ES40KM-1) continued

Installation Using a Crane

NOTE: Ground mount positioning on the foundation is dependent upon predetermined azimuth viewing requirements. The ground mount assembly arm should be positioned opposite the satellite requirement. If your site is in the Northern hemisphere, your satellite will be located in the South. If your site is in the Southern hemisphere, your satellite will be located in the North.

Step 4 — Lower the ground mount assembly onto the anchor bolts with the corresponding hole pattern.

Step 5 — Attach the ground mount assembly to the eight corresponding anchor bolts using a 3/4 inch flat washer and 2-3/4 inch hex nuts. One 3/4 inch hex nut is supplied with the anchor bolt kit and the second 3/4 inch hex nut is supplied with the antenna.

Step 6 — Remove the steel strapping from the ground mount assembly.

Step 7 — Tighten the foundation hardware using the A-325 tensioning procedure.

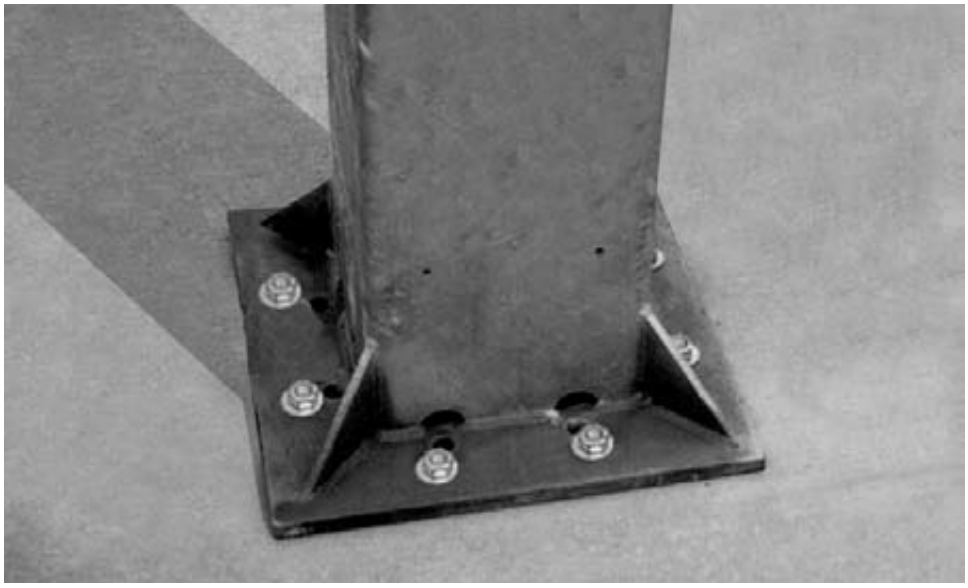

Figure 23 - Ground mount assembly attached to the foundation

Copyright © 2023 Kratos Defense & Security Solutions Inc.

Motorizable Ground Mount Assy (ES40CM-1 or ES40KM-1) continued

Installation Without a Crane

As stated earlier, Kratos recommends the use of a crane during this installation process; however, we recognize that a crane may not always be available. If a crane is not available, the following steps provide the procedure for installing the ground mount assembly without a crane.

Step 1 — Carefully remove the ground mount assembly (P/N 208800-motorizable or P/N 202680-2- manual) from the packing crate. Leave the steel strapping intact to avoid disengagement of the panning frame from the square-tube weldment during the ground mount installation.

Step 2 — Lay the ground mount assembly on its side, in line with the anchor bolts (P/N 203314-manual or P/N 203666-motorizable) as shown in Figure 24.

NOTE: Ground mount positioning on the foundation is dependent upon predetermined azimuth viewing requirements. The ground mount assembly panning-frame arm should be opposite of the satellite requirement. If your site is in the Northern hemisphere, your satellite will be located in the South. If your site is in the Southern hemisphere, your satellite will be located in the North.

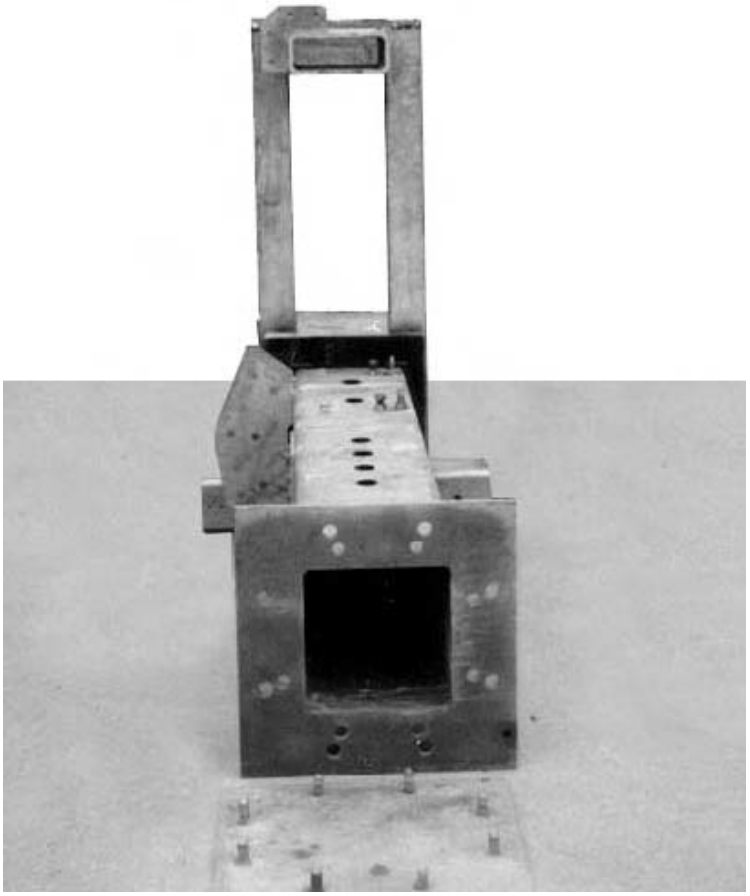

Figure 24

Copyright © 2023 Kratos Defense & Security Solutions Inc.

Motorizable Ground Mount Assy (ES40CM-1 or ES40KM-1) continued

Installation Without a Crane

Step 3 —Lift the ground mount assembly into an upright position. In the absence of a crane, it is recommended that a minimum of three people assist in the lifting of the mount assembly as shown in Figures 25, 26.

Figure 25

Figure 26

Be very cautious when lowering the mount. Do not lower the mount onto your feet.

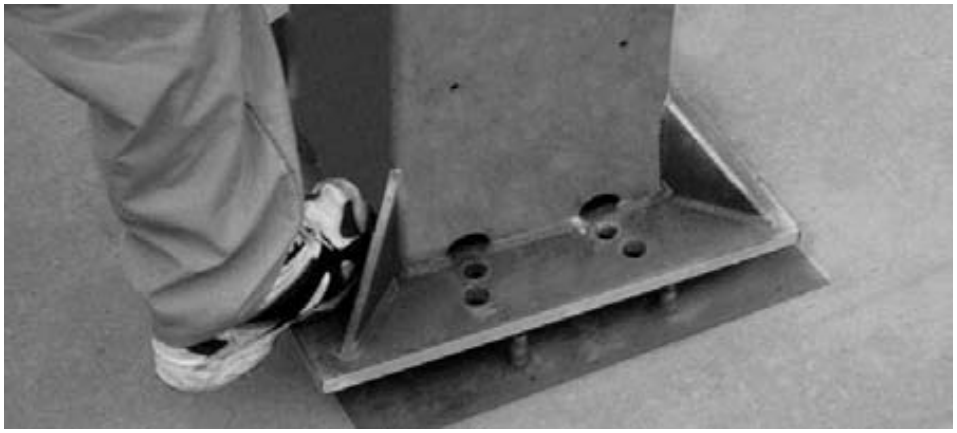

Figure 27

NOTE: You may need to adjust the mount when lifting it to ensure that the anchor bolts are aligned directly underneath the base of the ground mount assembly as shown in Figure 27.

Copyright © 2023 Kratos Defense & Security Solutions Inc.

Motorizable Ground Mount Assy (ES40CM-1 or ES40KM-1) continued

Installation Without a Crane

Step 4 — Attach the ground mount assembly to the eight corresponding anchor bolts using a 3/4 inch flat washer and 2-3/4 inch hex nuts. One 3/4 inch hex nut is supplied with the anchor bolt kit and the second 3/4 inch hex nut is supplied with the antenna.

NOTE: Ground mount positioning on the foundation is dependent upon predetermined azimuth viewing requirements. The ground mount assembly arm should be opposite the satellite requirement. If your site is in the Northern hemisphere, your satellite will be located in the South. If your site is in the Southern hemisphere, your satellite will be located in the North.

Step 5 — Remove the steel strapping from the ground mount assembly.

Step 6 — Tighten the foundation hardware using the A-325 tensioning procedure.

Figure 28 shows the ground mount assembly attached to the foundation

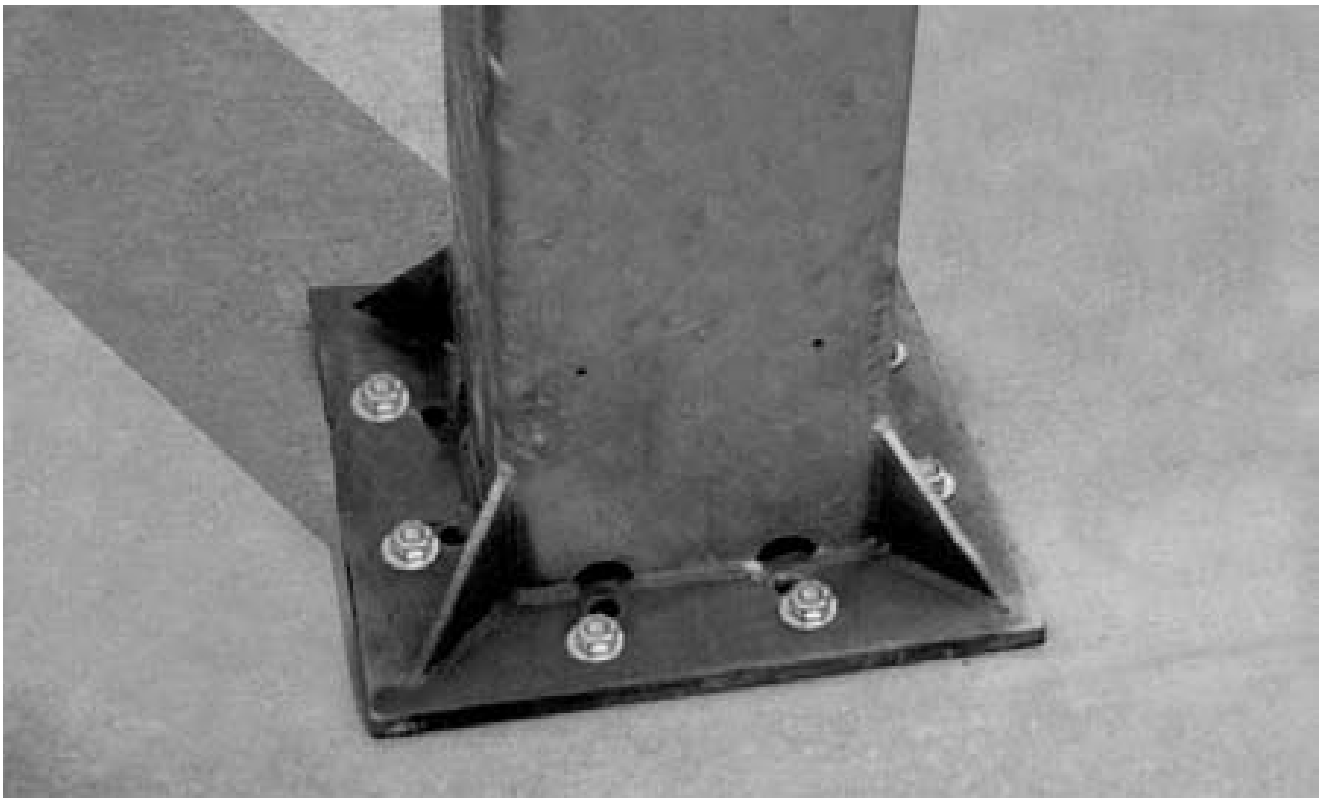

Figure 28

Copyright © 2023 Kratos Defense & Security Solutions Inc.

Pedestal Assembly

NOTE: The ground mount assembly enables 180 degrees positioning for selected azimuth viewing. Azimuth range coverage is plus or minus 90 degrees, divided into three 120 degree continuous ranges with a 30 degrees overlap. Elevation adjustment is continuous from 0 degrees to 90 degrees.

Step 1 — Position and mount the azimuth tiller arm (P/N 203112) to the tiller-arm bracket on the left side (facing the satellite) of the ground mount assembly. This mounting position of the azimuth tiller arm is dependent upon pre-determined azimuth range requirements as shown in Figure 29.

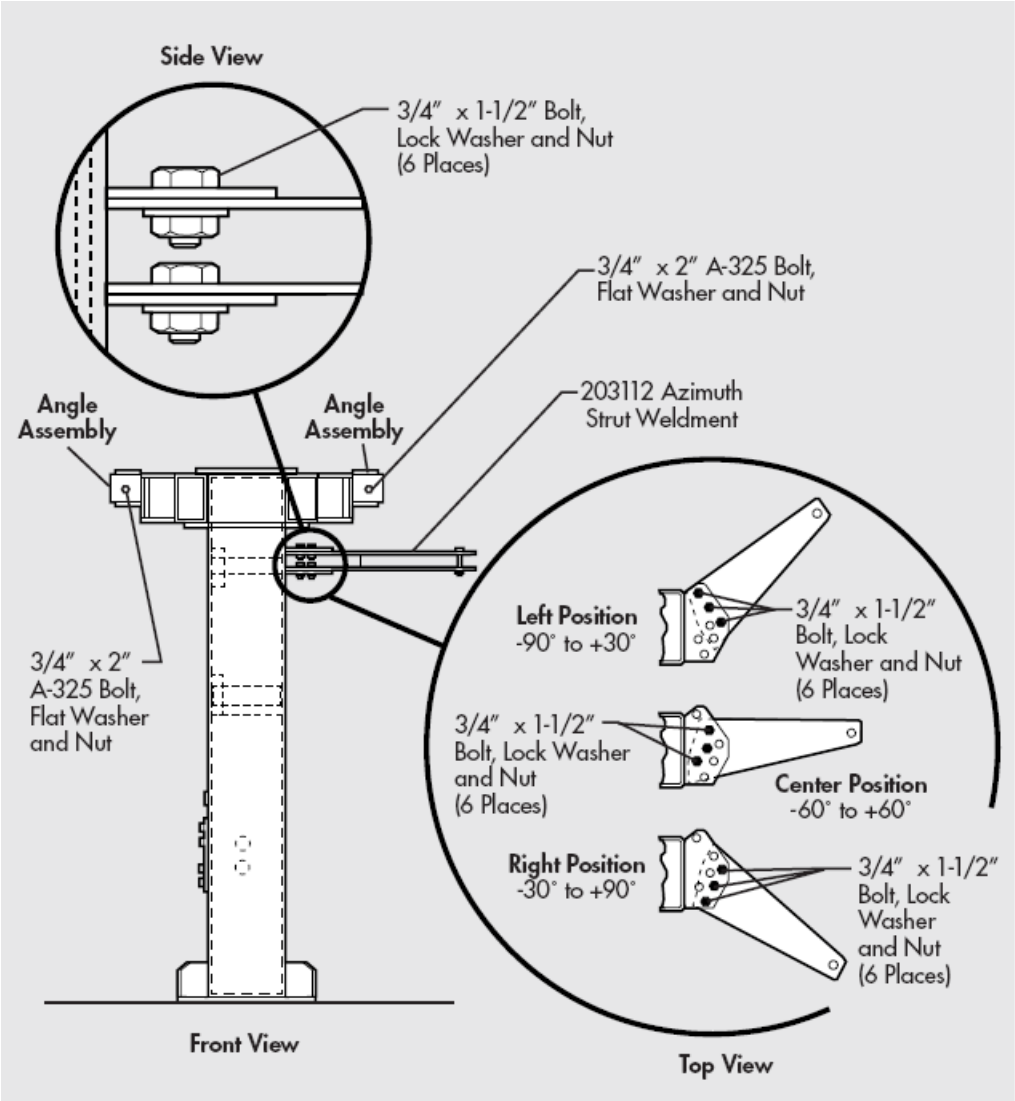

Figure 29

Step 2 — Tighten the hardware using the A-325 tensioning procedure.

Copyright © 2023 Kratos Defense & Security Solutions Inc.

Pedestal Assembly continued

Step 3 — Bolt the azimuth pivot assembly (top and bottom) brackets to the ground mount assembly using 5/8 inch hardware (hex bolt, flat washer and hex nut) as shown in Figure 30.

Figure 30

Step 4 — Bolt one jack to the azimuth pivot assembly using 5/8 inch hardware (hex bolt, flat washer and hex nut) as shown in Figure 31.

Figure 31

Copyright © 2023 Kratos Defense & Security Solutions Inc.

Pedestal Assembly continued

Step 5 — Unscrew the jack using a spud wrench or optional hand wheel, until it meets with the front azimuth strut weldment as shown in Figure 32

Figure 32

Step 6 — Place pivot blocks (P/N 205876) on both sides of the jackscrew ends, bolting with lubricated 1/2 inch hex bolt, flat washer and hex nut as shown in Figure 33

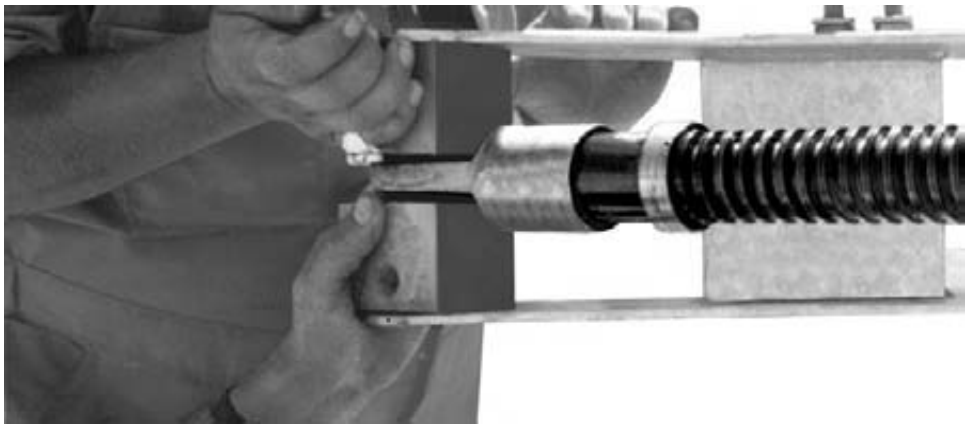

Figure 33

Step 7 — Tighten the hardware using the A-325 tensioning procedure.

Step 8 — Lubricate the jackscrews according to the maintenance instructions.

Step 9 — Pull the protective boot over the jackscrew, and clamp at the end as shown in Figure 34.

Copyright © 2023 Kratos Defense & Security Solutions Inc.

Pedestal Assembly continued

Note: Position condensation drain holes downward.

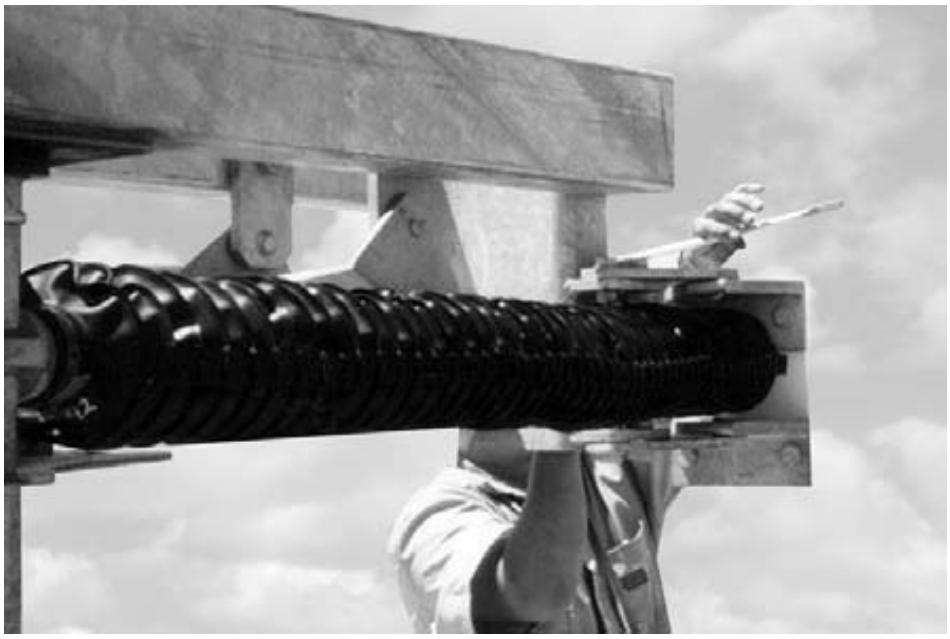

Figure 34

Step 10 — Bolt the elevation pivot assembly brackets (P/N 208370 - left and P/N 208371 - right) to the inside of the ground mount assembly as shown in Figure 35.

Figure 35

Copyright © 2023 Kratos Defense & Security Solutions Inc.

Pedestal Assembly continued

Step 11 — Bolt the jack to the elevation pivot assembly using 5/8 inch hardware (hex bolts, flat washers and nuts) as shown in Figures 36, 37.

Figure 36

Figure 37

Step 12 — Loosen the clamp on the jack boot.

Step 13 — Tighten the hardware using the A-325 tensioning procedure.

Step 14 — Lubricate the jackscrews using the maintenance procedures.

Step 15 — Pull the protective boot over the jackscrew, and clamp it at the end as was performed with the azimuth jackscrew.

The ground mount assembly is now completed with the necessary operational essentials. All ground mount options (such as motors) have separate instructional bulletins located in the parts kit that contains the option.

Copyright © 2023 Kratos Defense & Security Solutions Inc.

Reflector Assembly

Step 1 — Reflector should be assembled on a clear flat area in front of the foundation pad. Clear debris from area.

Unscrew the sides and the front of the container.

Figure 38

Each panel is fastened to the crate braces on top and the bottom by joint plates

Figure 39

Carefully unscrew each panel from the crate one by one during installation.

Figure 40

Figure 41

Step 2 — Place plastic sheeting from packing crate as shown in figure 42. Cut and build center standoff from the cutting marks on the Kratos crate or use custom 34 inch brace (standoff) top support center of reflector. Cut from the marks on the Kratos crate outer ring wood supports or use custom 3 inch supports for the outer rim of the reflector (3 supports per panel piece). It is desirable that supports will be leveled to allow faster and easier reflector assembly.

Copyright © 2023 Kratos Defense & Security Solutions Inc.

Reflector Assembly continued

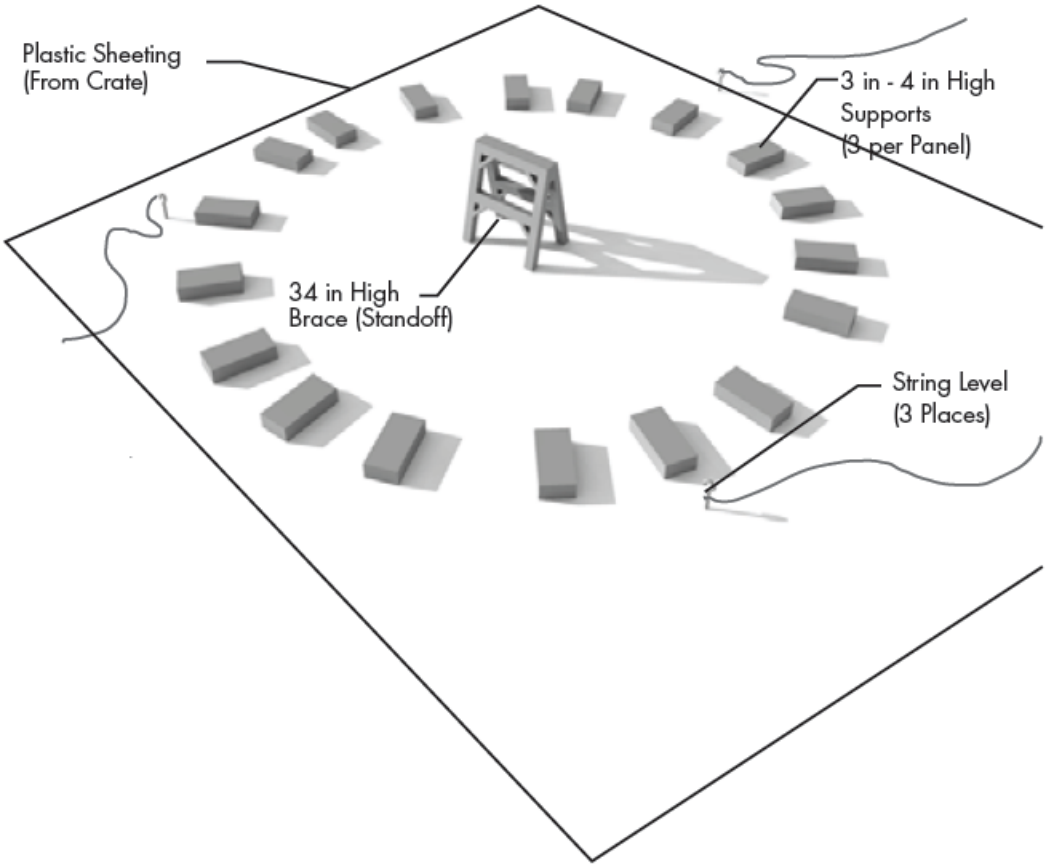

Figure 42 - Arrange Temporary Supports

Step 3 — Identify and organize antenna parts as shown in the following illustrations and photos. **Note:** All reflector segments are identified individually by one or two letter designation (A,B,C,D,E,F,A-B, B-C, C-D, and E-F). Locate the markings on the reflector segments in order to assemble the reflector in the proper sequence. See figure 43, for parts with stamped I.D. letters.

Copyright © 2023 Kratos Defense & Security Solutions Inc.

Reflector Assembly continued

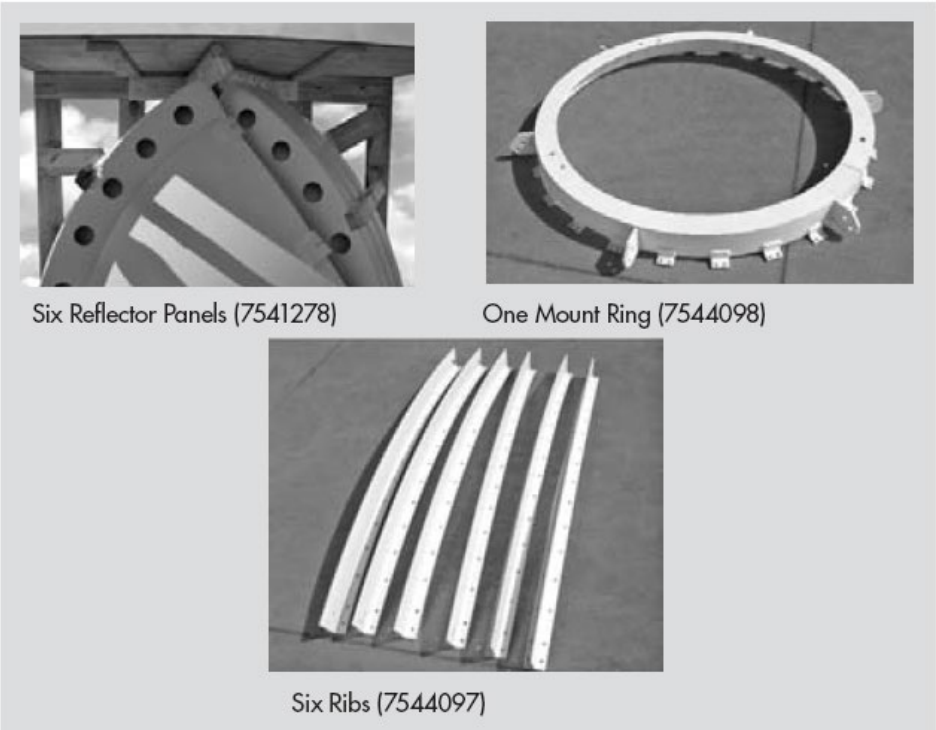

Figure 43

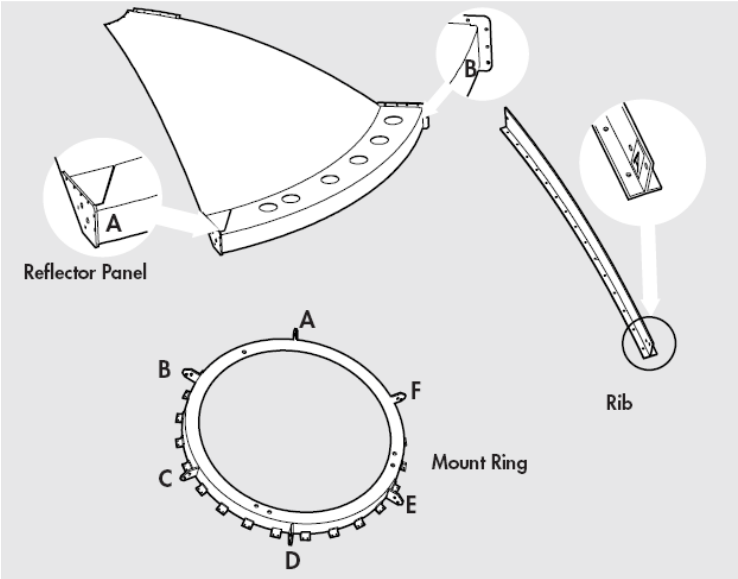

Figure 44

Copyright © 2023 Kratos Defense & Security Solutions Inc.

Reflector Assembly continued

The common parts without any identification are as follows:

Figure 45 - 1 Feed Mount Ring (7572100)

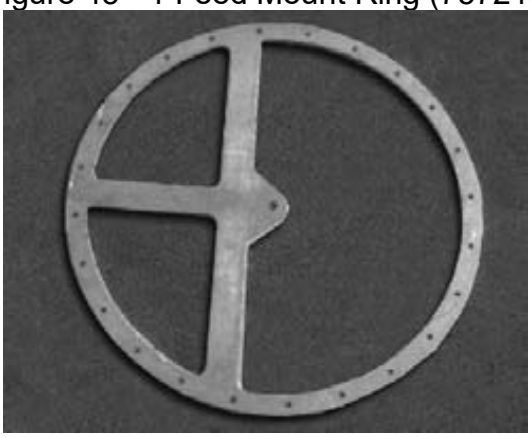

Following is the reflector hardware kit.

Figure 46

Reflector Hardware Kit

Figure 47

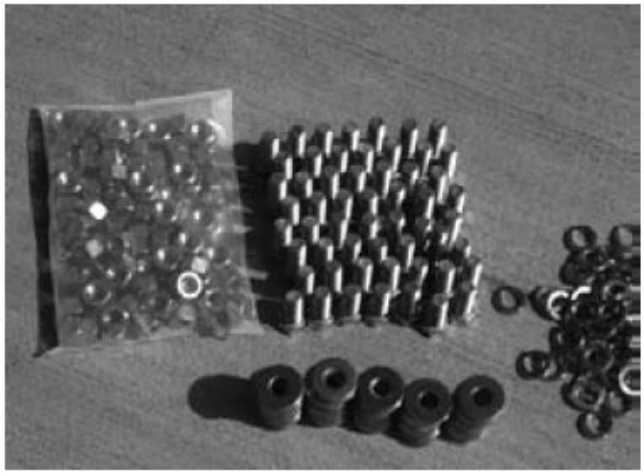

Outer Ring Hardware (3/8 -16)

Mounting Ring Hardware (Special Shoulder Bolt

Figure 48

Copyright © 2023 Kratos Defense & Security Solutions Inc.

Reflector Assembly continued

Step 4 — Place the center of the first panel (7541278) on the 34 inch standoff and outer rim of panel on supporting blocks with concave side down. Place the center of the second panel on the center brace. Insure that the match-markings are correct. (Example – A to A, B to B etc.), as shown in figure 44.

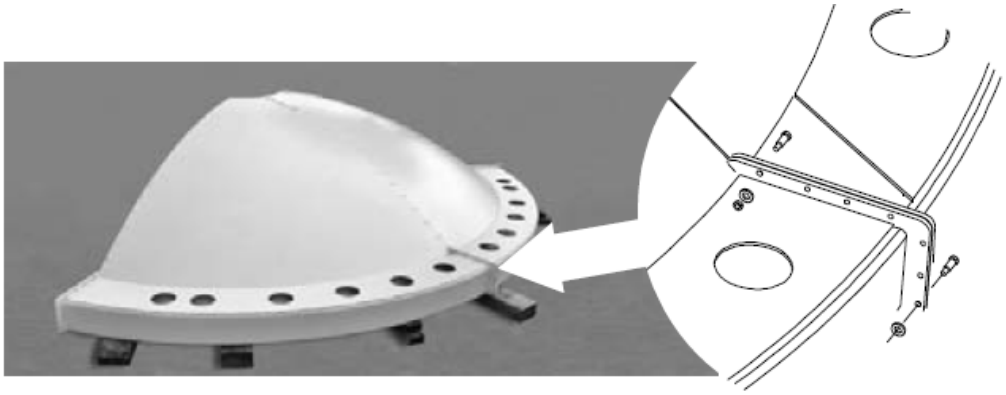

Figure 49

Step 5 — Insert and hand tighten special hardware shoulder bolts to the first joint plate connection

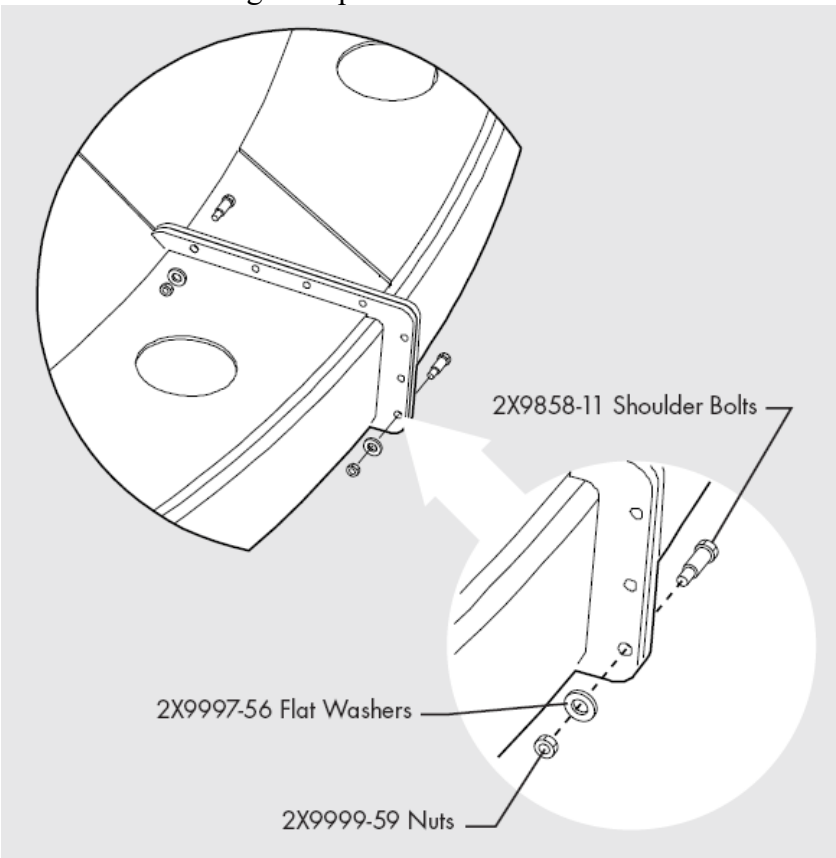

Figure 50

Copyright © 2023 Kratos Defense & Security Solutions Inc.

Reflector Assembly continued

Step 6 — Insert and hand tighten 2 x 5/16 bolts inside the torsion panel at each joint plate connection.

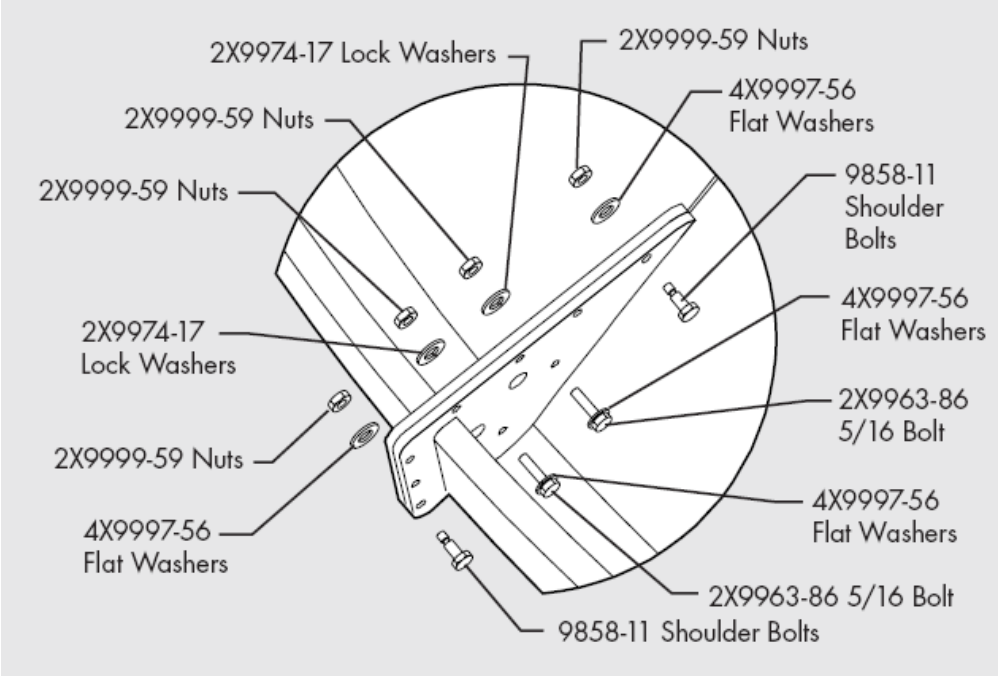

Figure 51

Step 7 — Insert and hand tighten 5 x 5/16 bolts outside the perimeter of each joint plate of each connection.

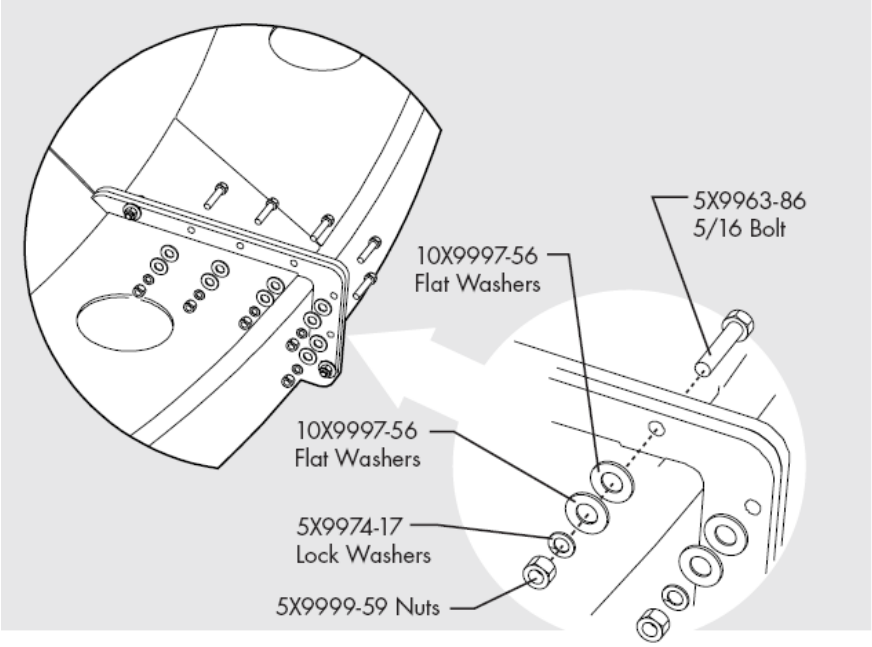

Figure 52

Copyright © 2023 Kratos Defense & Security Solutions Inc.

Reflector Assembly continued

Step 8 — Place the correct match-marked rib (7544097) on the seam and insert and hand tighten all rib hardware (1/4-20 x 1.25 Screw, Nut & L/Washer). Insert screws from concave side of reflector panels.

Figure 53

Step 9 — Install remaining panels and ribs per previous instructions. Note: Leave one panel and rib unassembled until ring is in place and assembled

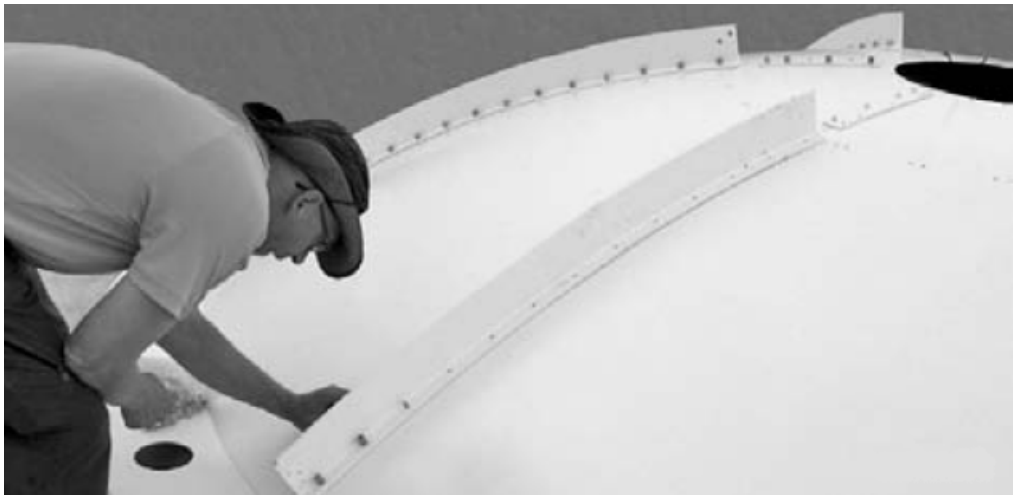

Figure 54

Step 10 — Before the last panel is in place, carefully unscrew mount ring (7544098) from the crate. Lay center mount ring (7544098) on top of antenna in correct position. Ring is stamped to the rib marking. You can also slide cone (7545141) under the reflector for future installation or leave it till later feed installation.

Figure 55

Copyright © 2023 Kratos Defense & Security Solutions Inc.

Reflector Assembly continued

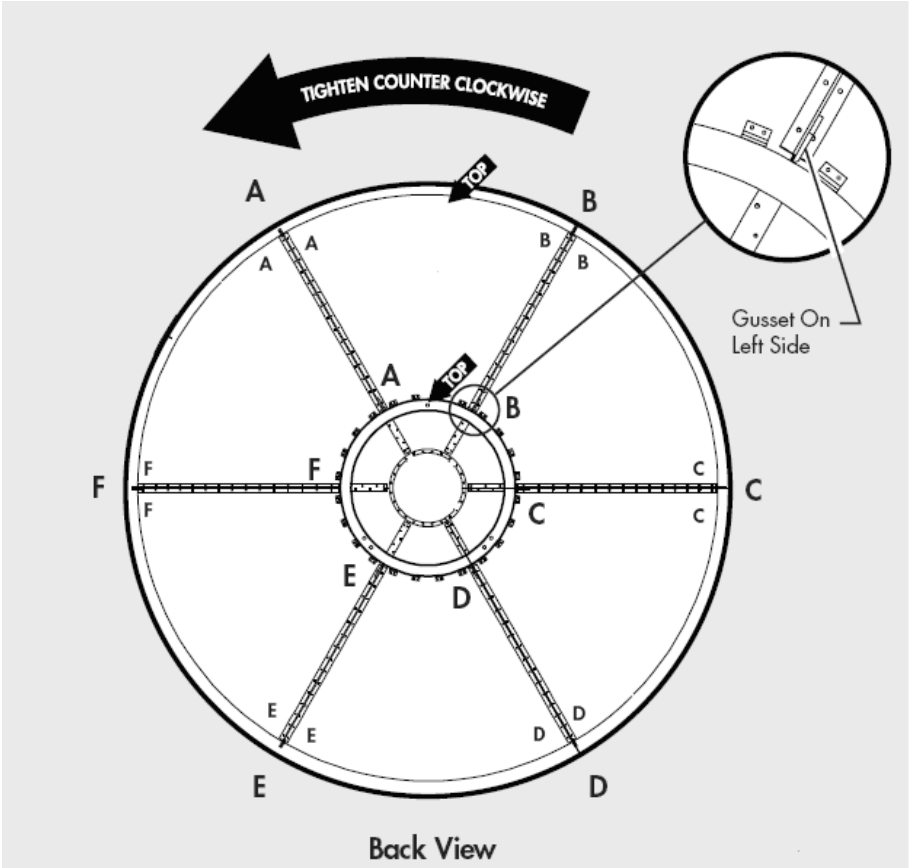

Figure 56

Step 11 — Install the remaining panel and last rib.

Figure 57

Copyright © 2023 Kratos Defense & Security Solutions Inc.

Reflector Assembly continued

Step 12 — Start snug tighten all hardware following steps below.

1. All shoulder bolts on all joint plates
2. All inside torsion panels 5/16 bolts on all joint plates
3. All exterior 5/16 bolts on all join t plates
4. Tighten 8 rib bolts (4 at each side) high at a time going around the reflector
5. Tighten all mount ring hardware

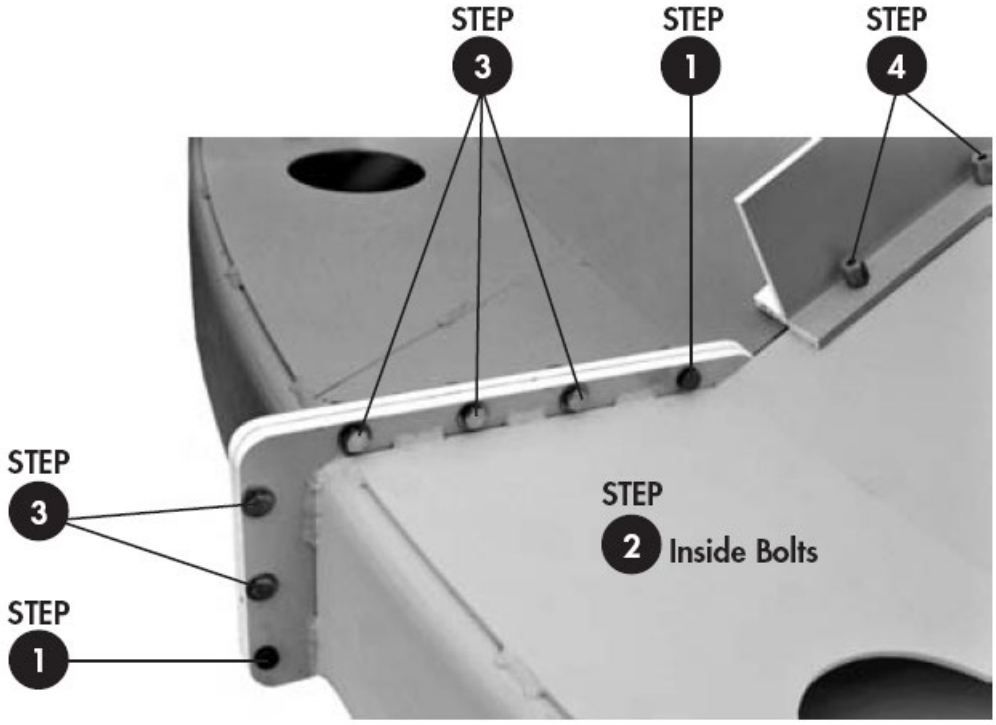

Figure 58

Figure 59

Copyright © 2023 Kratos Defense & Security Solutions Inc.

Reflector Assembly continued

Step 13 — Install all 3/8-16 hardware between mount ring and ribs, thumb tighten it. See figure 60 for reference.

Figure 60

Step 14 — After all other hardware is snug tightened, then snug tighten 3/8-16 rib to mount ring bolts.

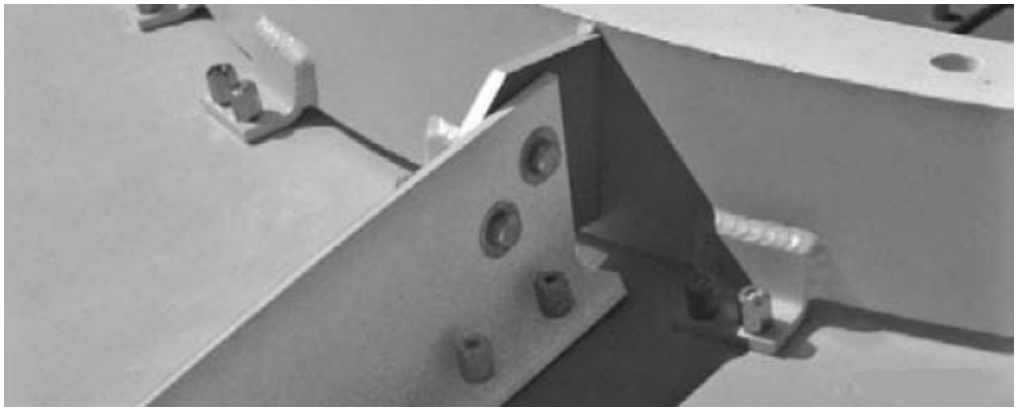

Figure 61

Step 15 — Place and fasten feed mount ring (7572100) from outside and cone (7545141) from the inside hand tighten ¼-20 hardware.

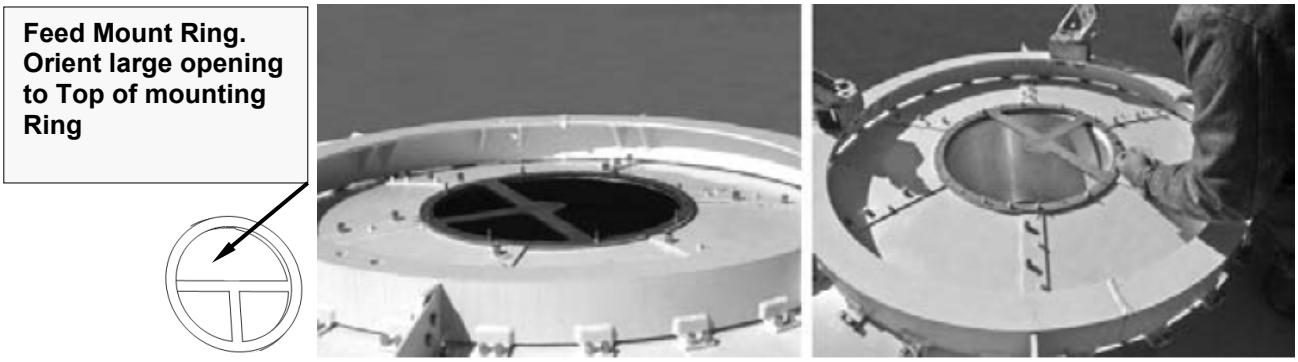

Figure 62

Copyright © 2023 Kratos Defense & Security Solutions Inc.

Enclosure

See Enclosure Installation P/N 7566240 included with P/N ENCL-40-1 Kit.

Reflector to Manual Mount Assembly

Step 1 — For manual mount install last two universal brackets (7542460) on spacers (7545087) with ¾-10 x 5.0” long hardware. Hand tighten the hardware.

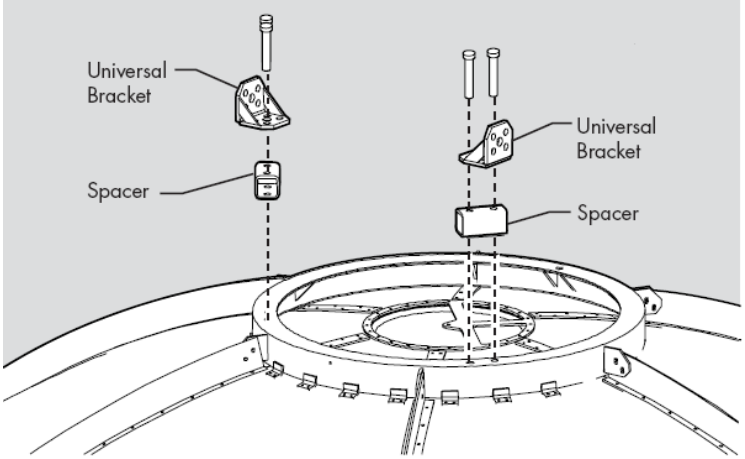

Figure 63 - Manual Mount

Step 2 — Lift the reflector and position the reflectors universal brackets (manual mount or elevation pivot bracket motorized mount) in place with the mount universal brackets. From the one side of the reflector and mount assembly. Drive the 1”-8 bolt through the central hole. Align the universal brackets on the other side of the reflector and add second 1”-8 bolt. Add 1” washers and nuts on both bolts. Hand tighten them.

Figure 64 - Manual Mount

Step 3 — For Manual Mount Attach the U-bracket (7545088) on the jackscrew (7544729) with the preinstalled and drill nut (7545089) using 1”-8 x 5” long bolt, washer and nut. Tighten bolts per ASTM A325 procedures. Attach U-bracket (7545088) to the top hole of the reflector mounting ring (7544098) using ¾-10 hardware.

Copyright © 2023 Kratos Defense & Security Solutions Inc.

Reflector to Manual Mount Assembly continued

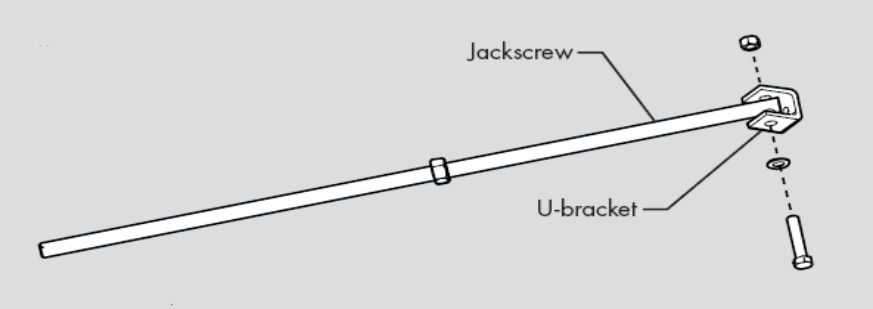

Figure 65 - Manual Mount Elevation jack

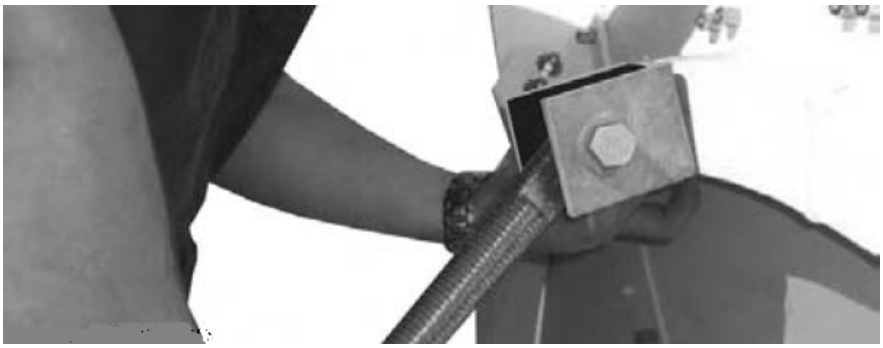

Figure 66 - Manual Assembly

Step 4 — For Manual Mount estimate the positioning of the reflector in the required transmitting / receiving sector. Tighten bottom pedestal bolts per ASTM A-325 procedures.

Copyright © 2023 Kratos Defense & Security Solutions Inc.

Reflector to Motorizable Mount Assembly

The next step in the installation process is the reflector assembly. for the ES40C-1, ES40K-1, ES40CM-1, ES40KM-1 earth station antennas. The reflector should be assembled on a clear, flat area in front of the foundation pad. Clear debris from area.

Step 1 — For motorizable mount, attach elevation pivot bracket to reflector as shown in figure 67.

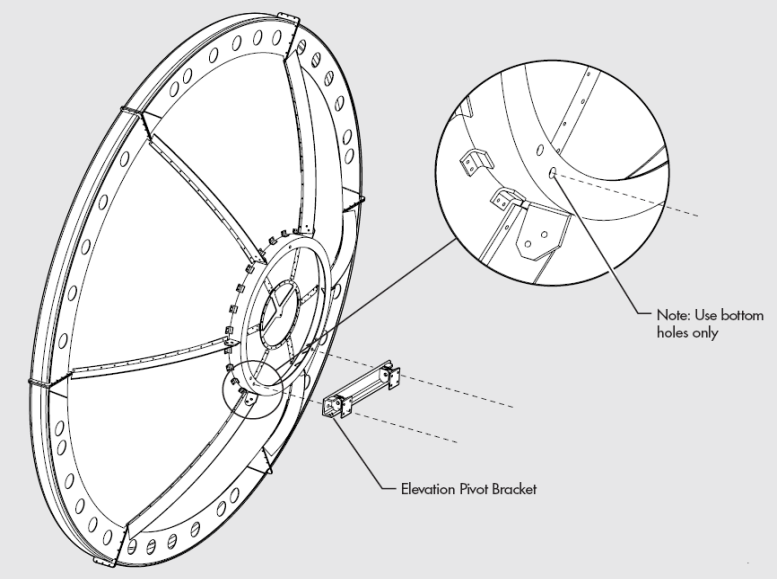

Figure 67 Motorized Mount

Step 2 — Lift the reflector, and position elevation pivot bracket in place with the ground mount assembly.

Figure 68 - Enclosure Bracket

Copyright © 2023 Kratos Defense & Security Solutions Inc.

Reflector to Motorizable Mount Assembly continued

Step 3 — For motorizable mount unscrew the jack by using a spud wrench until the jack connects to the back of the enclosure as shown in Figure 69.

Figure 69 - Motorizable Mount Elevation Jackscrew

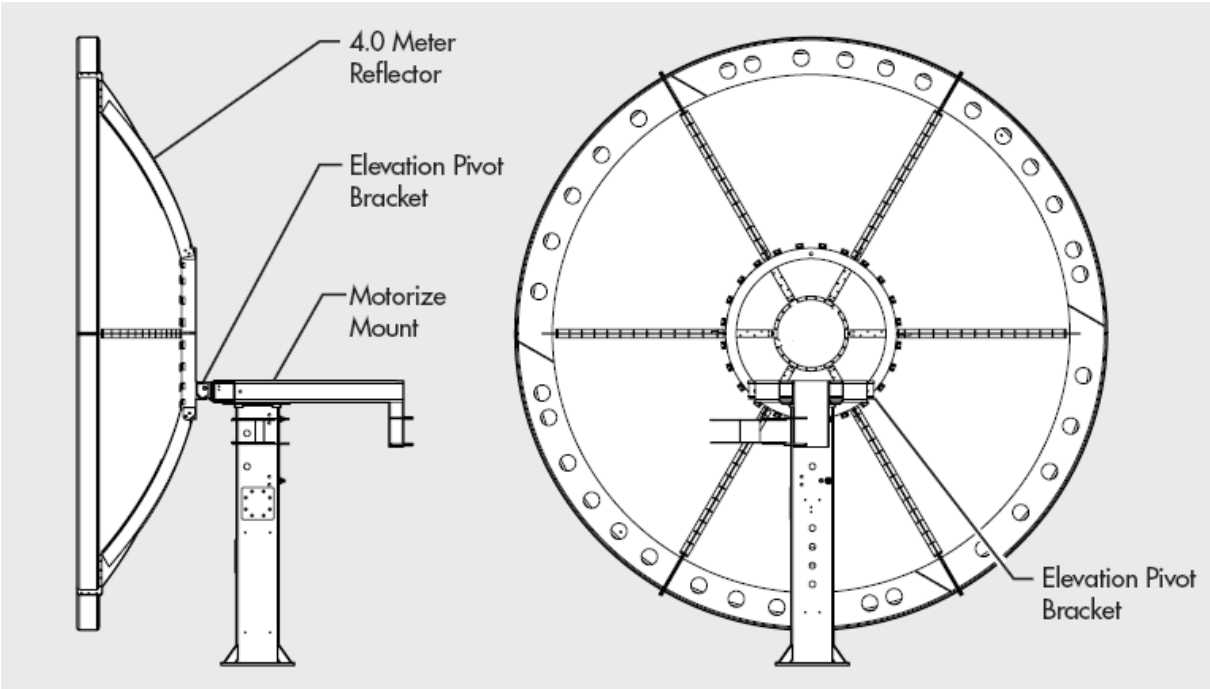

Figure 70 - Motorized Mount

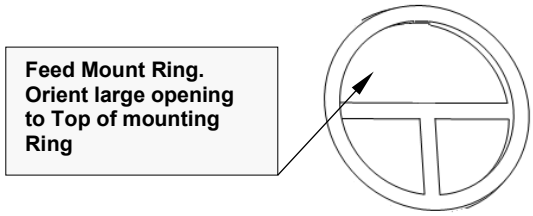

Copyright © 2023 Kratos Defense & Security Solutions Inc.

Reflector to Motorizable Mount Assembly continued

Step 4 — Screw 2 x 1.5” nuts and one washer to the opposite side of the jackscrew. Pull jackscrew through the elevation pivot bracket (7542693) see figure 71. Add 2 more 1.5 nuts and one washer. Snug tighten the nuts.

Step 5 — Tighten ¾”-10 x 5” long bolts from step1 and 1-8 bolts from step 2 per ASTM A-325 procedures.

Step 6 — Snug tighten bolt rods jam nuts 3/4-16. Using azimuth 5/8 bolts and azimuth fine adjustment 3/4 screw find transmitting / receiving pick. Tighten azimuth fine adjustment screw to snug.

Figure 71

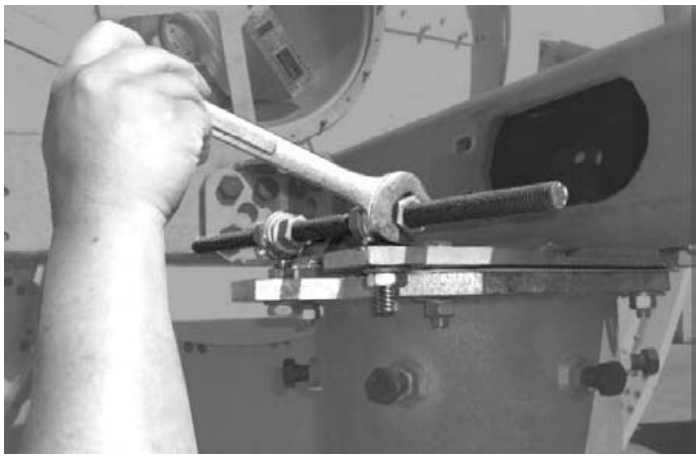

Figure 72

Step 7 — Tighten 4 x 5/8 azimuth bolts per ASTM A325 procedures.

Figure 73

Copyright © 2023 Kratos Defense & Security Solutions Inc.

Subreflector Strut Assembly

Note: Subreflector assembly can also be accomplished after mounting reflector to mount.

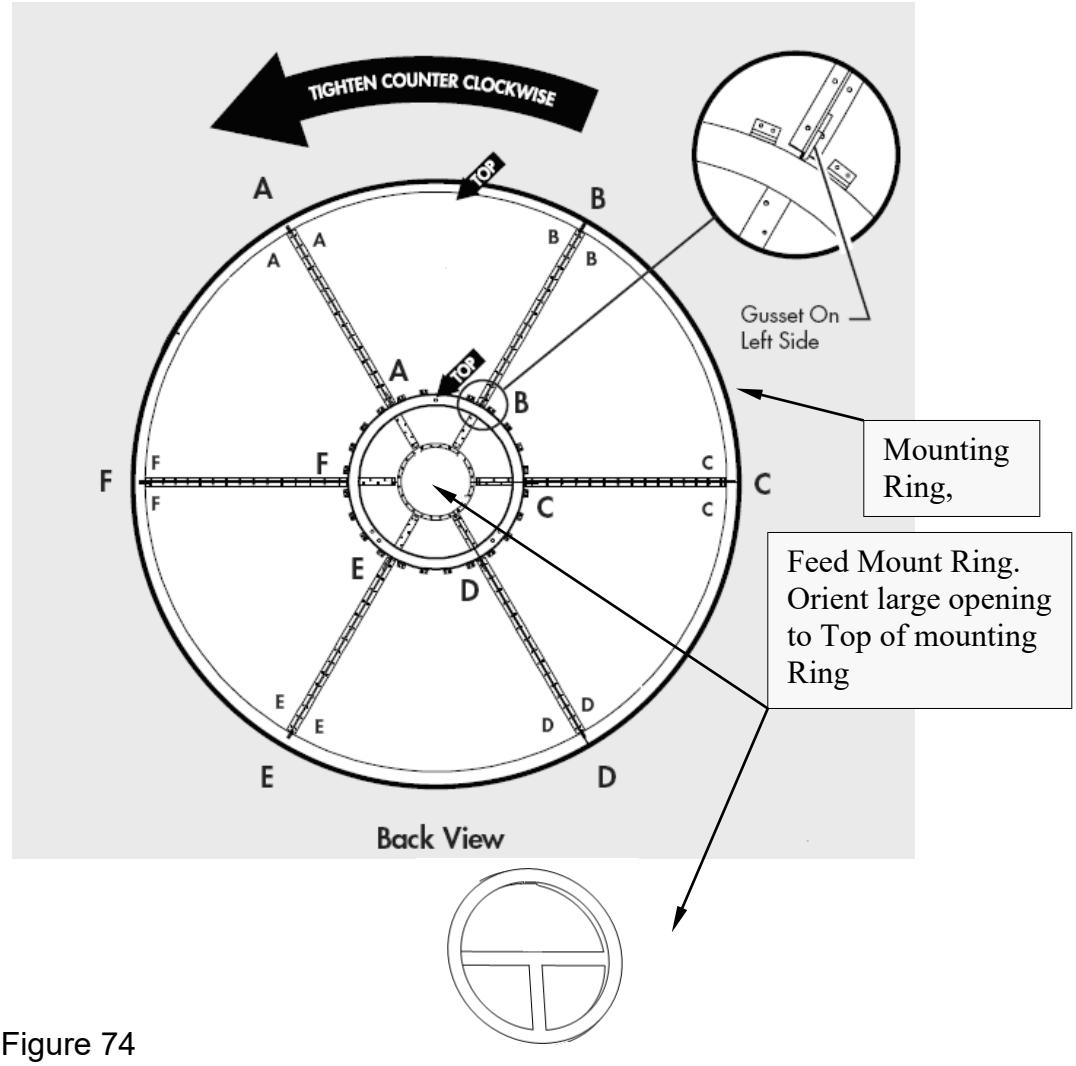

Figure 74

Copyright © 2023 Kratos Defense & Security Solutions Inc.

Subreflector Strut Assembly continued

Step 1 — First lay subreflector struts on the ground. Use 3/8-16 bolts, lock washers, nuts and four L-brackets to combine struts. Attach U-brackets to struts with bolts, lock washers and nuts.

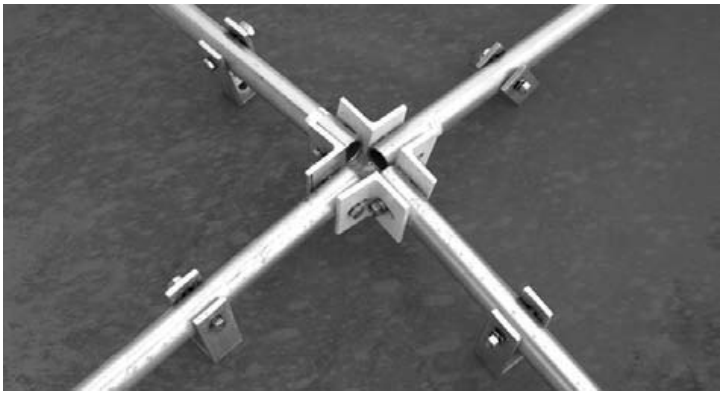

Figure 75

Step 2 — Attach adjustment plate (303763) to the U-brackets. Hand tighten all bolts/nuts.

Figure 76

Step 3 — Attach remaining L-brackets to the ends of the struts with 3/8 long hardware and hand tighten.

Figure 77

Copyright © 2023 Kratos Defense & Security Solutions Inc.

Subreflector Strut Assembly continued

Step 4 — Install plate 7577690 with 9963-115, 9974-63 and 9997-79 to sub reflector. Use Loctite 242 on screw threads.

Install threaded studs to the plate using a nut, flat and lock on both sides of the plate as shown below. Have roughly .250” of threads exposed on bottom of the plate. Use Loctite 242 on nut threads.

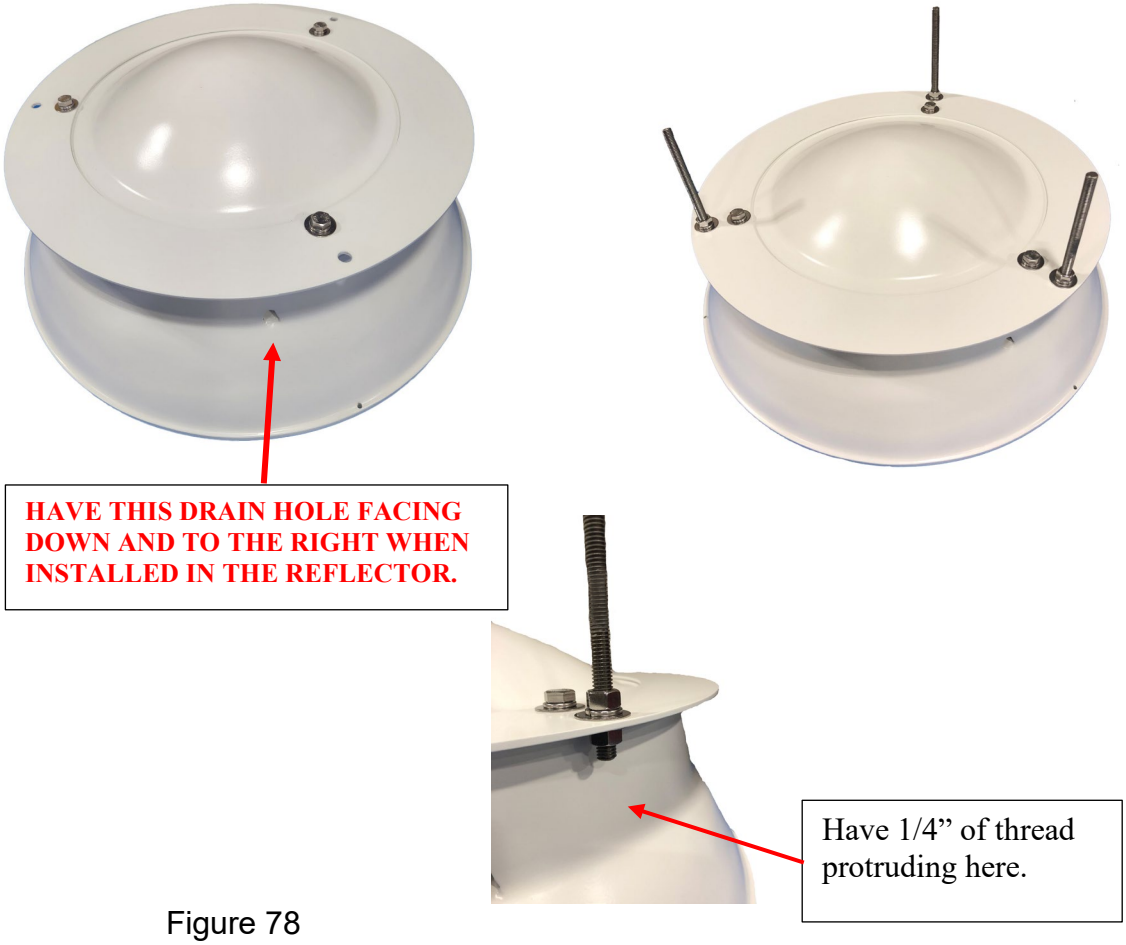

Figure 78

Step 5 — Place subreflector strut assembly inside the reflector (on the ground or on the mount) at 90° elevation position.

Figure 79

Copyright © 2023 Kratos Defense & Security Solutions Inc.

Step 6 — Place back-up plates behind the reflector and align as shown with holes in the reflector. Assemble angle brackets to reflector with 3/8-16 bolts, lock washers, nuts and back-up.

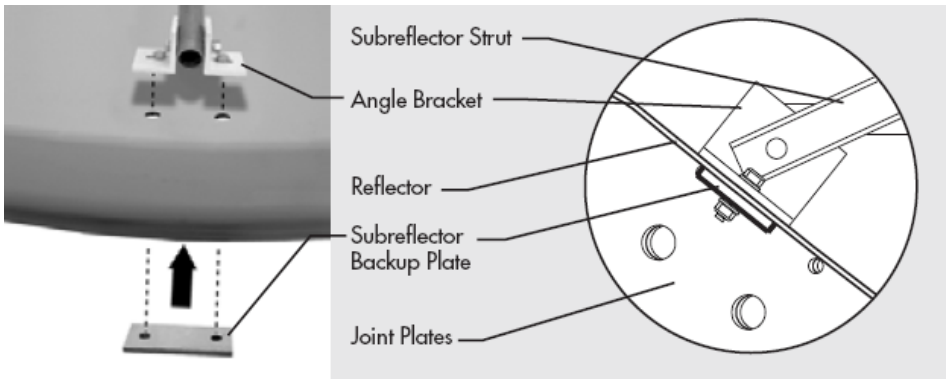

Figure 80

Subreflector Strut Assembly continued

Step 7 — Attach Sub reflector to Adjustment Plate. Position subreflector as shown in figure 81 below 48.16” from the top of the reflector skin to the bottom of the subreflector flat surface. This dimension represents most probable reflector apex distance (focal point). Optimization of the subreflector will be required in most applications, refer to the Pattern Optimization Procedure section.

Figure 81

Copyright © 2023 Kratos Defense & Security Solutions Inc.

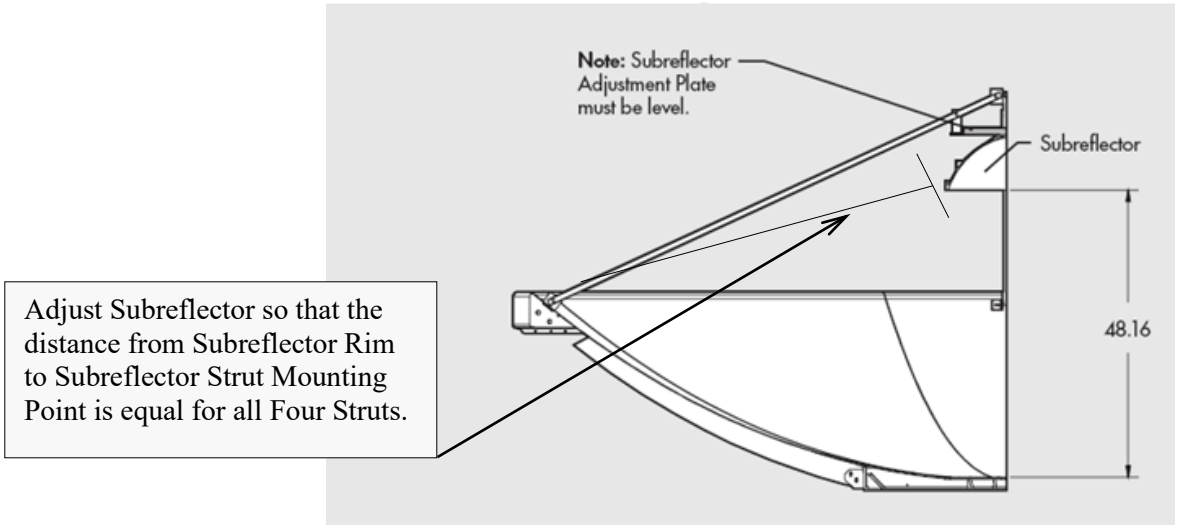

Figure 82 – Subreflector Adjustment

Copyright © 2023 Kratos Defense & Security Solutions Inc.

Calculations for Antenna Pointing

Formulas

Formulas for calculating true azimuth (AZ), true elevation (EL), are knowing earth station latitude, longitude and satellite longitude (over the equator), the following calculations should be performed.

$AZ = 180° + \tan^{-1} \tan \theta / \sin \alpha$

= true azimuth with respect to earth. **NOTE:** This equation applies to earth stations north of the equator. For earth stations south of the equator.

$AZ = 360° - \tan^{-1} \tan \theta / \sin \alpha$

where:

α = earth station latitude

θ = relative longitude

= satellite longitude minus earth station longitude

NOTE: Earth station latitude values are positive (+) for sites located north of the equator and negative (-) for sites located south of the equator. Earth station longitude values are positive (+) for sites west of Greenwich and negative (-) for sites located east of Greenwich.

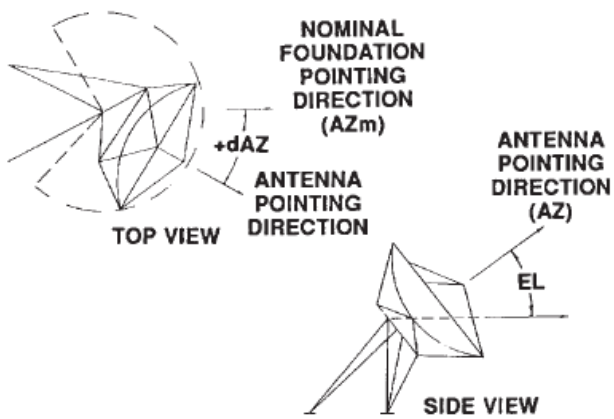

$EL = 90° - T - R$ = true elevation with respect to earth.

where:

$R = \cos^{-1} (\cos \theta \cos \alpha)$ and $T = \tan^{-1} \sin R / 6.6166 - \cos R$

Copyright © 2023 Kratos Defense & Security Solutions Inc.

Pattern Optimization Procedure for Gregorian Optic Earth Station Antennas

Overview

This procedure provides instructions for pattern performance optimization of all Kratos Gregorian Optic Earth Station Antennas. The antenna performance id optimized through ITERATIVE subreflector adjustments based on measured antenna patterns at the **transmit frequency band**. Test personnel should be familiar with off-satellite measurement techniques and common antenna pattern terminology.

The subreflector and struts should be installed and aligned per Kratos installation procedures. The installation instructions describe the normal lateral (centering) and focal distance set-up for the subreflector. All Type Approved antennas are supplied with a subreflector setting rod. Type Approved antennas do not require additional adjustment.

Initial Patterns

Verify by iterative movement in the azimuth and elevation axes that the antenna under test is peaked on the satellite. Verify the feed polarization axis is properly aligned with the satellite polarization axis. For transmit band alignment, coordination with the satellite operator is necessary.

Important: For this procedure record all azimuth patterns by sweeping the antenna from **EAST** to **WEST** (applies to northern hemisphere, reverse for southern hemisphere). The left half of the antenna pattern should correspond to the antenna beam pointing east of the satellite. The same applies to the elevation pattern where the antenna should be swept from the **UP** (above satellite) to the **DOWN** position.

Measure and record an azimuth and elevation pattern, including at least 3 side lobes on each side of the main beam. Example patterns are shown in figure 1. Techniques for performing these measurements are detailed in Kratos Test Procedures (AE01T-A2036) and (AE01T-A2037).

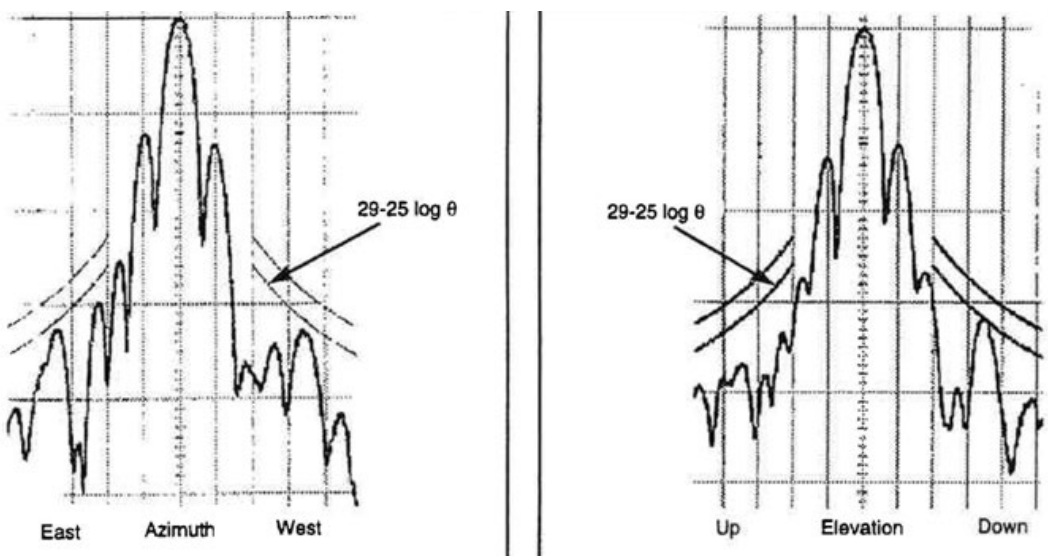

Figure 1 – Example Patterns

Copyright © 2023 Kratos Defense & Security Solutions Inc.

Pattern Optimization Procedure for Gregorian Optic Earth Station Antennas continued

Side lobe Balance Adjustment

The objective of this section is to adjust the subreflector for optimum envelope. It is recommended that this procedure be followed until the side lobes on either side of the main lobe are below the intended specified curve (29 – 25 log θ).

In general, tilting the subreflector left or right influences are azimuth pattern side lobes while top to bottom tilt effects the side lobes in the elevation pattern. Tilt of the subreflector may be altered by adjustment of the nuts at 3 locations shown in figure 2.

Note: An out of center subreflector cannot be optimized by tilt. Ensure the subreflector is centered to points on the main reflector. Adjustments made at 4 and 8 o'clock are required for left-right tilt for azimuth side lobe balance. It is important to realize that these adjustment locations will **ALSO** effect elevation side lobe balance to a lesser degree. Elevation side lobe balance may be optimized independent of azimuth by adjustment at 12o'clock **OR** 4 and 8 o'clock as a pair. In order to minimize the number of adjustments required, it is recommended that azimuth side lobes be optimized **FIRST** before proceeding to elevation side lobe balancing.

Azimuth Side lobe Balancing

The direction of subreflector adjustment for azimuth side lobe improvement is best explained by the use of the acronym **WOLD** (**W**est **O**ut **L**eft **D**own). By moving the west side of the subreflector out (away from the main reflector) the left azimuth side lobe will decrease in amplitude and correspondingly the right side lobe will rise. **Note:** The same side lobe change will occur by moving the east side of the subreflector in (towards the main reflector). Reversing the direction of subreflector movement (i.e., west in) will reverse the direction of side lobe movement (i.e., right side lobe down).

Iteratively adjust and remeasure the azimuth pattern until the entire pattern is optimized. Do not adjust any one bolt more than 2 turns at a time.

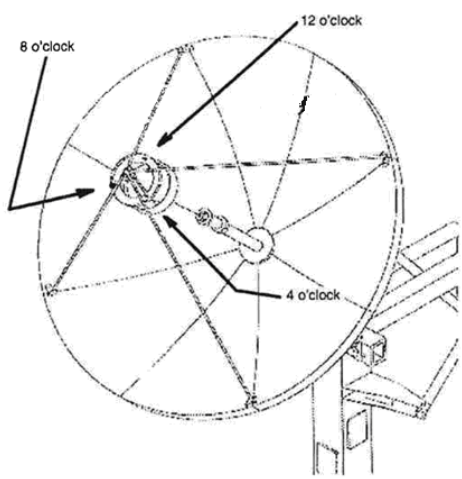

Figure 2 – Adjustment Locations

Copyright © 2023 Kratos Defense & Security Solutions Inc.

Pattern Optimization Procedure for Gregorian Optic Earth Station Antennas continued

Elevation Envelope Balancing

Similar to the east-west movement which influences the azimuth side lobes, top-bottom movement changes the elevation side lobe balance. For elevation pattern the acronym for side lobe directional change is **BOLD (B**ottom **O**ut **L**eft **D**own).

Elevation balance can now be achieved somewhat independent of azimuth by using the adjustment stud at 12 o'clock alone or the locations at 4 and 8 o'clock as a pair.

After optimization of the EL pattern, remeasure the azimuth pattern to verify the results have not changed, depending on the range of adjustments conducted. It may be necessary to repeat the above azimuth and elevation adjustments until both AZ and EL patterns achieve the intended specification.

Antenna Final Focusing

With the envelope optimization complete, the subreflector may now be adjusted in-out locate the best focal positioning for the antenna under test. The goal of this exercise is to achieve the maximum null depth between the 1st side lobes and the main beam (see figure 1), while still retaining the outer most lobes response to the specification curve. This condition generally corresponds to maximum antenna gain and best side lobe performance.

For this procedure it is imperative that all 3 adjustment locations be altered **EQUALLY** to minimize degradation of the side lobe balance already obtained.

Measure and record the "average" of all four, 4 null depth readings (left and right hand side for azimuth and elevation) on the last set of patterns taken. As it is not possible to determine the correct initial direction (in or out) simply choose one and adjust all 3 locations equally by ½ turn.

If the null depth only degraded with each adjustment, return to the initial setting and begin adjustment in the opposite direction. Repeat the same sequence as before until the maximum depth is achieved. Generally, the average null depth should be greater than 20db and the 1st side lobe peaks should be 11 to 13db below the main beam. Kratos dual reflector antennas are designed to have high 1st side lobes to produce higher gain/meter. Therefore, Kratos does not have a specification for 1st side lobe levels or null depth. Kratos guarantees only pattern envelope compliance for each antenna type.

Copyright © 2023 Kratos Defense & Security Solutions Inc.

Preventive Maintenance

This section contains periodic preventative maintenance instructions for the 4.0-Meter Earth Station Antenna. Included in this section are inspection and preventative maintenance procedures including cleaning and lubrication, painting and an operational voltage/ current checkout procedure deemed within the capabilities of the average station technician. Refer to applicable vendor manuals for any repair procedures not included in this section yet designated as capable of being performed in the "field" rather than requiring specialized facilities, tools and/or test equipment as well as technically trained personnel.

An operational checkout procedure provides an accurate indication of the overall earth station performance and should be performed at intervals of approximately three months. This procedure is essentially performed during the various modes of normal operation of the earth station. In addition, the operational checkout procedure should be performed after any repairs or adjustments have been made, or whenever the earth station is suspected of degraded operation. If any discrepancy in performance exists and the condition cannot be readily remedied to return the earth station to a proper operating condition, the appropriate troubleshooting procedures should be referenced to locate the fault. After the trouble is determined and the repairs effected, a final operational checkout procedure should be performed to verify that all discrepancies have been corrected.

The following paragraphs describe the inspection and preventative maintenance procedures for the earth station. These instructions include general cleaning and inspection, the preservation of metal parts and the lubrication of moving parts. Periodic replacement of assemblies or components as a preventative measure is not required. Malfunctions of the earth station can be traced to components, assemblies and parts through the use of applicable troubleshooting procedures.

General Cleaning

To prevent the excessive accumulation of dust and dirt as well as the removal of such contaminants, thoroughly clean the equipment whenever visually inspecting the earth station components. No special cleaning procedures are required. However, a thorough cleaning in accordance with the following procedures is required to assure continued trouble-free operation.

Electrical Parts

Minor cleaning, such as the removal of dust and loose foreign particles can be accomplished by one of the following:

- Vacuuming
- Using a soft brush or lint-free cloth
- Blowing out the dust and dirt with low pressure (5 to 25 psi), dry compressed air

When using air to blow off the contaminants, either avoid or be careful when directing the air stream on delicate parts. To remove imbedded dirt, grease or oil from electrical parts: use a 50% solution of isopropyl (rubbing) alcohol and apply with a soft bristle brush. It may be necessary to brush some parts vigorously with a stiff bristle brush to remove imbedded and hardened dirt particles. If possible, avoid excessive use of cleaning solvent on electrical insulation. After cleaning, allow the cleaned parts to dry for 10 to 15 minutes before placing the equipment into operation.

Copyright © 2023 Kratos Defense & Security Solutions Inc.

Preventive Maintenance continued

Mechanical Parts

Clean mechanical parts by first removing dust, dirt and other loose contaminants with a scraper, stiff brush (bristle, or wire in the case of rust or corrosion), or cloth or compressed air at 25 to 40 psi. Any accumulated imbedded dirt, corrosion, grease or oil deposits that require further cleaning may be removed with a bristle or wire brush and a cleaning solvent such as acetone or equal. After cleaning, allow cleaned parts to dry for 10 to 15 minutes before placing the equipment into operation.

Inspection

The frequency of inspection is contingent upon the user's individual standards and the operational environment in which the earth station is located. However, a visual inspection of the earth station components should be performed at least semi-annually. Where there are no established wear limits, perform a visual inspection to locate worn or damaged parts which could cause improper functioning of the earth station. It is recommended that the mechanical and electrical inspection be performed on the assembled or partially disassembled equipment to determine the extent of disassembly required prior to
completely disassembling a suspected malfunctioning component or module. In the absence of any special inspection requirements, operational tests are the most effective means in isolating parts and assemblies requiring further inspection. Any condition noted during inspection that may preclude continued proper operation of the earth station prior to the next scheduled inspection should be noted. The discrepant condition should be corrected (repaired or replaced) immediately or at the conclusion of the inspection procedure.

Local Control/Motor Drive Controller

Inspection of the local control/motor drive controller conforms generally to standard visual inspection procedures on electromechanical equipment. In addition to these standard procedures, perform the following checks and visual inspections for the specific conditions noted:

WARNING: Care must be taken to avoid electrical shock. Failure to heed warning could result in injury or death.

- Check the main panel for illegible and indistinct panel markings.
- Connect the detachable hand controller assembly (local control) for visible signs of damage such as cracked housing, damaged connector/bent pins, cuts or damage to cable jacket insulation, etc. Examine selector switches for damage and proper actuation movement.
- Inspect all wiring and cables for discoloration and burned insulation, dirt, breaks, security of connection and other signs of deterioration. Examine connections for dirt, flux, corrosion and mechanical defects. Check for loose or broken lacing and cut, brittle, abraded, frayed or cracked insulation.
- Examine connectors for corrosion, broken inserts and stripped threads. Check connector shells for distortion and dents, and contact pins for bends, misalignment or other deformities. Check connector inserts for carbon tracking indicating arc-over.

Copyright © 2023 Kratos Defense & Security Solutions Inc.

Preventive Maintenance continued

• Check all electrical components for dirt, chips, cracks, breaks, discoloration or other signs of deterioration and damage. A discolored, blistered or burnt condition is evidence of overload. Measure actual value of suspect electrical components and compare against specified value where applicable.

• Check transformer for an excessive wax deposit on the surface, discoloration or a pungent odor indicative of burning varnish denoting overheating or a total breakdown.

• Check all terminal blocks for broken or missing terminals and stripped threads. Check tightness of lead attaching hardware.

CAUTION: Make sure electrical power has been disconnected.

• Check the motor starters and circuit breakers for free operation. Check tightness of all wire connections.

• Visually inspect printed circuit board for signs of debris that might short out components. Verify that all LED indicators are functioning correctly. Check the terminal block connectors for tightness of lead attracting hardware and signs of scorching or burning.

•Check for security of all hardware and stripped or otherwise damaged threads. Check metallic parts for corrosion, dents, distortion and other deformation.

• Check for evidence of water inside the enclosure. If any water is in evidence, check that all seals are intact and if not, use a coating of RTV-108 (silicone rubber sealant) to seal any exposed electrical fitting, bolt hole or other possible water entry into the enclosed electrical components in order to maintain a water proof condition.

• Check or change vapor corrosion inhibitor unit.

Antenna Inspection

Inspection of the antenna conforms generally to standard visual inspection procedures performed on electromechanical equipment. In addition to these procedures, perform the following checks and visual inspections for the specific conditions noted:

• Inspect all wiring and cables, particularly the network to enclosure and enclosure to mount interfaces, for discoloration and burned insulation, moisture entry, corrosion, dirt, breaks, security of connection, and other signs of deterioration. Examine connections for dirt, corrosion and mechanical defects. Check for loose or broken lacing and cut, abraded, frayed, brittle and cracked insulation.

• Examine connectors for corrosion, broken inserts and stripped threads. Check connector shells for distortion and dents, and contact pins for bends, misalignment or other deformities. Check connector inserts for cracks, carbon tracking, burns or charring indicating arc-over.

• Check all electrical components for dirt, cracks, chips, breaks, discoloration and other signs of deterioration and damage. A discolored, blistered or burnt condition is evidence of overload.

• Operate the azimuth and elevation drives as well as the feed rotation in both the plus and minus direction from the local control/motor drive controller at least once every three months during antenna down time. Check the mechanical limit switches provided at the end points stop antenna and feed movement, and limit travel to prevent structural interference and damage. Check the mechanical limit

Copyright © 2023 Kratos Defense & Security Solutions Inc.

Preventive Maintenance continued

switches for corrosion and water entry and the arm on each feed limit switch for free movement without binding. Be certain both feed rotation limit switch arms are not distorted and ride centrally on the actuating cam to open their corresponding limits switch.

• Inspect the azimuth and elevation jackscrew boots for security of attachment at both ends, for abrasion, tears, cuts, brittleness and other damage that may expose the jackscrew to the environment (water, dust, etc.). Minor repairs can be made with RTV-108 silicone rubber sealant.

• Visually inspect the feed window for dirt and the feed, feed supports, feed window and reflector for distortion, foreign object damage and environmental deterioration due to ice and snow, dust, rain, hail and high winds, etc. which may cause electrical component and/or structural deformation.

• Check the cable attachment to the resolvers and to the LNA or LNBs and enclosure mount interface for security, the cable rouging for secure hanger attachment and the cable insulation for cuts, cracking, abrasion and other deterioration. Check the LNA or LNBs and the resolvers for a secure mechanical attachment. Ensure proper torquing of polarization drive gear box setscrews and appropriate tensioning of corresponding drive chain assembly, if applicable.

• Check (if applicable) that the drain holes in the bottom of the enclosure are not obstructed and there is no evidence of water accumulation. Check the enclosure doors for proper closure and that the door seals are intact, not torn, abraded or otherwise damaged. Check that all other seals are intact and if not, use a coating of RTV-108 (silicone rubber sealant) to seal any exposed electrical fitting, bolt hole, or other possible water entry to electrical components in order to maintain a weatherproof condition. If the enclosure is provided with a vent fan, check for free operation of the fan blade. The fan bearings are permanently lubricated; any binding, abnormal noise or vibration necessitates replacement of the fan assembly. Check and replace the fan filter element if it appears dirty or obstructed with dust.

Antenna Inspection

• Check for the appearance of surface lubricants that will cause the accumulation of dirt and grime. Clean off all excess surface lubricants with a cloth and, if required, a cloth dampened (not wetted) with acetone, or equal.

• Visually inspect all mechanical parts for freedom of operation with no misalignment, binding or interference. Check all cabling for sufficient slack to prevent cable strain as well as adequate restraint to prevent abrasion or chaffing during antenna and feed movement.

• Check security of antenna mounting and interconnecting assembly hardware. Be certain all electrical grounding connections (including cross-axis grounding straps) and intact and secure, not corroded or broken. Thoroughly clean any noticeable corroded portions of grounding cables, unplated portion of universal terminals and corresponding mounting surfaces with a wire brush. Replace rather than tighten any loose A-325 structural hardware. The hardware distorts at initial installation and once loosened will not maintain the required high strength friction connection. All other assembly and installation hardware should be tightened to its original torqued condition. When installing new structural hardware, do not use a wrench with a lever arm longer than two feet.

• Examine painted aluminum and galvanized surfaces and touch-up where required.

Copyright © 2023 Kratos Defense & Security Solutions Inc.

Preventive Maintenance continued

Drive System Voltage and Current Checks

At the conclusion of the installation procedure and prior to turning the system over to the station facility, an installation acceptance check-off sheet was prepared and duly signed off if installed by an Kratos crew. Part of this check-off included voltage readings retaken to determine if proper voltage was available. Current readings were also taken as a reference for future comparison to serve as a troubleshooting aid in determining possible equipment degradation and shortened life. Any current reading taken during the following procedure that significantly varies by more than five percent from the pre-established reference values necessitates trouble shooting the particular system involved to determine the cause and required corrective action.

Approximately every three months and during a period of down time, disconnect as applicable the RF transmitter and all power supplies. The main disconnect switch in the main load center box at the antenna site must be in the ON position and the detachable hand-held controller assembly must be plugged in.

Open the outer local control/motor drive controller door at the antenna site to gain access to the conductors supplying power to the azimuth, elevation and polarization drive motors. Turn the primary power disconnect switch to the ON position.

Turn the Az/El speed switch to the FAST position. Turn the AZIMUTH EAST/WEST switch to either position and while the antenna is rotating, carefully use a clamp-on ammeter in accordance with the ammeter manufacturer's instructions to take current readings off each of the power conductors (phases) connected to the main terminal block at the bottom of the panel. Record the current draw in the equipment log and compare the readings to the reference values entered in the installation/acceptance check off. If the readings differ significantly, refer to the appropriate troubleshooting information
and perform the applicable corrective action. Then take voltage readings off each of the three conductors; the readings should agree with each other - within two percent. Turn the AZIMUTH switch to OFF.

Repeat preceding step (3) with the AZIMUTH EAST/WEST switch in the alternate operating position.

Turn the ELEVATION DOWN/UP switch to either position and while the antenna is rotating, carefully use a clamp-on ammeter in accordance with the ammeter manufacturer's instructions to take current readings off each of the power conductors (phases) connected to the main terminal block at the bottom of the panel. Record the current draw in the
equipment log and compare the readings to the reference values entered in the installation/acceptance check-off. If the readings differ significantly, refer to the appropriate troubleshooting information and perform the applicable corrective action. Then take voltage readings off each of the three conductors; the readings should agree with each other - within two percent. Turn the ELEVATION switch to OFF.

Repeat the preceding step (5) with the ELEVATION DOWN/UP switch in the alternate operating position.

Repeat steps 3 through 6 with the Az/El speed in the SLOW position.

If all voltage and current readings are within tolerance, turn the primary power disconnect switch OFF. Then close and lock the outer local motor controller door. Disconnect the hand held controller to return antenna control to studio.

Copyright © 2023 Kratos Defense & Security Solutions Inc.

Preventive Maintenance continued

Pedestal Mount Bearing Pad Adjustment

The bearing pad (within the pedestal mount) adjustment rods/bolts require yearly adjustment and verification of torque value. With the antenna at zenith (90 degrees), follow the procedures presented below:

Loosen jam nuts on all rods/bolts.

Torque the upper adjustment rod evenly to 40-45 foot-pounds. Then torque the lower adjustment rod evenly to 40-45 foot-pounds.

Torque the upper adjustment bolt evenly to 40-45 foot-pounds. Then torque the lower adjustment bolt evenly to 40-45 foot-pounds.

Repeat steps 2 and 3 verifying all adjustment rods/bolts are evenly torqued within the limits specified.

Tighten the jam nuts.

Lubrication

For long life and trouble-free operation be certain no to extend the lubrication schedule beyond the frequency recommended in Table 1. The frequency should be shortened if the antenna is subjected to an adverse environment (e.g. high temperature, extended periods of rainfall, high humidity, dust storms, etc.). Any component or part should be immediately be lubricated if, during inspection or operation, rough, jarring or intermittent motion is noted, or if squeaky or other unusual noises are heard. Lubrication is required on all metal-to-metal rolling or sliding parts. Use the lubricants recommended. Do not over lubricate. Over-lubrication can often be as damaging as under-lubrication. Prior to the application of lubricant to any parts, use a clean cloth and/or bristle brush and remove any old lubricant to prevent an excessive build-up.

Remove indicated access plugs from square tube weldment and apply lubricant to panning frame tube assembly and corresponding thrust pads. Securely replace access plugs in square tube weldment. Be certain to remove any protective caps and clean off each lubrication fitting prior to injecting fresh grease. The elevation and azimuth jackscrew assemblies are equipped with a grease fitting and corresponding pipe plug on opposite sides of the jack housing. Remove the appropriate pipe plug and fill it with grease until lubricant seeps from pipe plug opening. Replace and securely tighten pipe plug.

The following is a list of the lubricant characteristics:

- Mobil Temp SHC32 - A non-soap hydrocarbon fluid type grease. Operating temperature is -65 degrees to 350+ degrees Fahrenheit (-54 degrees to 177+ degrees Celsius).

- Mobil SHC624 - A low temperature synthetic oil for worm gear reducers. Operating temperature range is -40 degrees to 125+ degrees Fahrenheit (-40 degrees to 52+ degrees Celsius).

- Moly Grease - A grease lubricant containing molybdenum disulfide. Operating Lubricant temperature range is -85 degrees to 300+ degrees Fahrenheit (-29 degrees to 149+ degrees Celsius).

Copyright © 2023 Kratos Defense & Security Solutions Inc.

Preventive Maintenance continued

Jackscrews/Motors

Periodically inspect lifting screws on jackscrew assemblies to insure adequate lubrication. Loosen jackscrew boot clamps to expose the lifting screw assembly. Fully extend jackscrew assembly, being careful not to exceed preset mechanical limits. Brush thin coating of Mobil SHC32 grease on exposed lifting screw. Replace boot and attach corresponding boot clamps. If lifting screw is rusty, remove existing lubricant with solvent and wire brush rusted area. Rinse with solvent and apply fresh grease.

Periodically inspect and remove dust and dirt deposits from the motor housings to avoid hindering the thread exchange with the ambient air. Slight dirt accumulation on the air vent screw through splash oil cannot be avoided, however, keep vent screw clean to ensure proper pressure compensation.

Gear Motor/Housing Fill Drain Requirements

Lube points 2 and 4, shown in Table 1, require removal of the indicated drain plugs and collecting/measuring the amount of SHC624 drain oil using measuring cup. The specified amount of oil must be added to the gear motor/hosing (after installing the drain plug) via the fill/vent plug opening using supplied funnel. Addition of the oil requires use of an appropriate filling utensil. Use of a modified level stick will not correctly gauge the appropriate amount of oil in the gear housings.

Table 1. Antenna Lubrication Chart

Lube Point	Parts to be Lubricated	Action	Frequency	Service Type	Lube Type	Quantity / Points	Kratos Number
1	Elevation jackscrew Housing	Lubricate	3 months	Pressure Fitting	SHC32	1	49208
2	Elevation Gear Motor Housing Fill and drain	Inspect Change	Monthly 3 months	Pipe Plugs	SHC624	10oz	47498
3	Azimuth Jackscrew Housing	Lubricate	3 months	Pressure Fitting	Shc32	2	49208
4	Azimuth Gear Motor Housing Fill and Dain	Inspect Change	Monthly 3 months	Pipe Plugs	SHC624	10oz	47497
5	Panning Frame Tube Assembly and Thrust Pads	Lubricate	3 months	Aerosol Spray Lubricant	Dry Moly	Surface Coverage	207911

Inspection requires checking for visible signs of oil leakage, draining, replacing and adding oil to ensure appropriate oil level requirements. Excessively dirty oil will require fresh replacement. If oil leakage is found to be excessive, refer to appropriate troubleshooting information and perform applicable corrective action. Periodic inspection procedures can be less frequent after first or second scheduled inspections.

Initial oil change requirements include flushing gear boxes with a standard cleaning agent.

Copyright © 2023 Kratos Defense & Security Solutions Inc.

Preservation of Component and Aluminum Part – Galvanized Surfaces

When preserving component parts, refer to the following paragraphs in this section.

Remove all loose paint and corrosion by scraping, wire brushing or using steel wool. If using steel wool near the feed window, make sure that none remains on the feed horn window. Edges of existing paint can be blended with a metal surface by using a fine grit sandpaper. Wipe the surface to be painted with a soft rag dampened with a small amount of acetone or equal. Be certain to remove all loose paint, corrosion, imbedded dirt, grease and oil deposits or the paint will not adhere to the surface. Acetone will dissolve paint if applied heavily and rubbed vigorously. The reflector may be washed with plain water if necessary. Do not use bleach, soap solutions or kerosene as it is difficult to remove the residue. Allow the cleaned surfaces to dry thoroughly before priming.
8

Prime the cleaned surface by applying zinc chromate primer. The primer can be applied with brush, roller or pressurized spray. If necessary, thin the primer with acetone to the proper consistency. Feather primer onto adjacent painted surfaces. Allow primer to thoroughly dry before applying the finish paint coat.

Paint all RF surfaces, such as the inside of the main reflector and subreflector with a high-reflectance white paint. This type of paint disperses light rays, reducing the focusing effect of the sun's radiation, thereby reducing heat build-up caused by the focused sun's rays on the feed system. Rear surfaces of the reflector and subreflector may be painted with a flat white enamel paint. The paint can be applied with a brush, roller or pressurized spray. If necessary, thin the paint with the appropriate thinner to the proper consistency. Thoroughly paint over the primed surfaces and blend with the existing painted surfaces.

Preservation of Galvanized Surfaces

Remove all loose paint and corrosion by scraping, wire brushing or using steel wool. Edges of existing paint can be blended with the metal surface by using a fine grit sandpaper. Wipe the surface to be painted with a soft rag dampened with a small amount of acetone, or equal. Be certain to remove all loose paint, corrosion, imbedded dirt, grease, and oil deposits or the paint will not adhere to the surface. Acetone will dissolve paint if applied heavily and rubbed vigorously. Do not use bleach, soap solutions or kerosene as it is difficult to remove these products' residue. Allow the clean surface to dry thoroughly before painting.

Paint the cleaned surface with a zinc-rich paint. The paint can be applied with a brush, roller or pressurized spray. If necessary, thin the paint with the appropriate thinner to the proper consistency.

Thoroughly paint over the cleaned surface and blend with the existing painted surface.

Stow Procedure for the 4.0M Antenna

In order to move the antenna to stow position, point the antenna to an Elevation angle of 90 degrees. The Azimuth jackscrew should be placed in the center of its travel. In preparation for extreme winds, such as the approach of a hurricane, antenna should be moved to this position. Stow positioning must be performed **before** wind speeds reach 65mph.

Copyright © 2023 Kratos Defense & Security Solutions Inc.